SEBU9105-02
May 2014

Operation and Maintenance Manual

C13 Industrial Engines

N3F 1-Up (Engine)

Important Safety Information

Most accidents that involve product operation, maintenance and repair are caused by failure to observe basic safety rules or precautions. An accident can often be avoided by recognizing potentially hazardous situations before an accident occurs. A person must be alert to potential hazards, including human factors that can affect safety. This person should also have the necessary training, skills and tools to perform these functions properly.

Improper operation, lubrication, maintenance or repair of this product can be dangerous and could result in injury or death.

Do not operate or perform any lubrication, maintenance or repair on this product, until you verify that you are authorized to perform this work, and have read and understood the operation, lubrication, maintenance and repair information.

Safety precautions and warnings are provided in this manual and on the product. If these hazard warnings are not heeded, bodily injury or death could occur to you or to other persons.

The hazards are identified by the “Safety Alert Symbol” and followed by a “Signal Word” such as “DANGER”, “WARNING” or “CAUTION”. The Safety Alert “WARNING” label is shown below.

⚠ WARNING

The meaning of this safety alert symbol is as follows:

Attention! Become Alert! Your Safety is Involved.

The message that appears under the warning explains the hazard and can be either written or pictorially presented.

A non-exhaustive list of operations that may cause product damage are identified by “NOTICE” labels on the product and in this publication.

Caterpillar cannot anticipate every possible circumstance that might involve a potential hazard. The warnings in this publication and on the product are, therefore, not all inclusive. You must not use this product in any manner different from that considered by this manual without first satisfying yourself that you have considered all safety rules and precautions applicable to the operation of the product in the location of use, including site-specific rules and precautions applicable to the worksite. If a tool, procedure, work method or operating technique that is not specifically recommended by Caterpillar is used, you must satisfy yourself that it is safe for you and for others. You should also ensure that you are authorized to perform this work, and that the product will not be damaged or become unsafe by the operation, lubrication, maintenance or repair procedures that you intend to use.

The information, specifications, and illustrations in this publication are on the basis of information that was available at the time that the publication was written. The specifications, torques, pressures, measurements, adjustments, illustrations, and other items can change at any time. These changes can affect the service that is given to the product. Obtain the complete and most current information before you start any job. Cat dealers have the most current information available.

⚠ WARNING

When replacement parts are required for this product Caterpillar recommends using Cat replacement parts.

Failure to follow this warning may lead to premature failures, product damage, personal injury or death.

In the United States, the maintenance, replacement, or repair of the emission control devices and systems may be performed by any repair establishment or individual of the owner's choosing.

Table of Contents

Foreword..... 4

Safety Section

Safety Messages..... 5

Additional Messages 6

General Hazard Information 7

Burn Prevention.....11

Fire Prevention and Explosion Prevention 11

Crushing Prevention and Cutting Prevention . 13

Mounting and Dismounting..... 14

Before Starting Engine 14

Engine Starting..... 14

Engine Stopping 15

Electrical System..... 15

Engine Electronics..... 16

Product Information Section

General Information..... 17

Product Identification Information..... 19

Operation Section

Lifting and Storage..... 22

Features and Controls 27

Engine Diagnostics..... 38

Engine Starting..... 39

Engine Operation..... 43

Cold Weather Operation..... 46

Engine Stopping 48

Maintenance Section

Refill Capacities..... 50

Maintenance Recommendations..... 58

Maintenance Interval Schedule 61

Maintenance Interval Schedule (Engines With Ratings Greater Than 439 hp) 62

Warranty Section

Warranty Information 106

Reference Information Section

Engine Ratings 107

Customer Service 108

Reference Materials 110

Index Section

Index.....114

Foreword

Literature Information

This manual contains safety, operation instructions, lubrication and maintenance information. This manual should be stored in or near the engine area in a literature holder or literature storage area. Read, study and keep it with the literature and engine information.

English is the primary language for all Cat publications. The English used facilitates translation and consistency in electronic media delivery.

Some photographs or illustrations in this manual show details or attachments that may be different from your engine. Guards and covers may have been removed for illustrative purposes. Continuing improvement and advancement of product design may have caused changes to your engine which are not included in this manual. Whenever a question arises regarding your engine, or this manual, please consult with your Cat dealer for the latest available information.

Safety

This safety section lists basic safety precautions. In addition, this section identifies hazardous, warning situations. Read and understand the basic precautions listed in the safety section before operating or performing lubrication, maintenance and repair on this product.

Operation

Operating techniques outlined in this manual are basic. They assist with developing the skills and techniques required to operate the engine more efficiently and economically. Skill and techniques develop as the operator gains knowledge of the engine and its capabilities.

The operation section is a reference for operators. Photographs and illustrations guide the operator through procedures of inspecting, starting, operating and stopping the engine. This section also includes a discussion of electronic diagnostic information.

Maintenance

The maintenance section is a guide to engine care. The illustrated, step-by-step instructions are grouped by fuel consumption, service hours and/or calendar time maintenance intervals. Items in the maintenance schedule are referenced to detailed instructions that follow.

Use fuel consumption or service hours to determine intervals. Calendar intervals shown (daily, annually, etc.) may be used instead of service meter intervals if they provide more convenient schedules and approximate the indicated service meter reading.

Recommended service should be performed at the appropriate intervals as indicated in the Maintenance Interval Schedule. The actual operating environment of the engine also governs the Maintenance Interval Schedule. Therefore, under extremely severe, dusty, wet or freezing cold operating conditions, more frequent lubrication and maintenance than is specified in the Maintenance Interval Schedule may be necessary.

The maintenance schedule items are organized for a preventive maintenance management program. If the preventive maintenance program is followed, a periodic tune-up is not required. The implementation of a preventive maintenance management program should minimize operating costs through cost avoidances resulting from reductions in unscheduled downtime and failures.

Maintenance Intervals

Perform maintenance on items at multiples of the original requirement. Each level and/or individual items in each level should be shifted ahead or back depending upon your specific maintenance practices, operation and application. We recommend that the maintenance schedules be reproduced and displayed near the engine as a convenient reminder. We also recommend that a maintenance record be maintained as part of the engine's permanent record.

See the section in the Operation and Maintenance Manual, “Maintenance Records” for information regarding documents that are generally accepted as proof of maintenance or repair. Your authorized Cat dealer can assist you in adjusting your maintenance schedule to meet the needs of your operating environment.

Overhaul

Major engine overhaul details are not covered in the Operation and Maintenance Manual except for the interval and the maintenance items in that interval. Major repairs are best left to trained personnel or an authorized Cat dealer. Your Cat dealer offers a variety of options regarding overhaul programs. If you experience a major engine failure, there are also numerous after failure overhaul options available from your Cat dealer. Consult with your dealer for information regarding these options.

California Proposition 65 Warning

Diesel engine exhaust and some of its constituents are known to the State of California to cause cancer, birth defects, and other reproductive harm.

Battery posts, terminals and related accessories contain lead and lead compounds. **Wash hands after handling.**

Safety Section

i04058294

Safety Messages

SMCS Code: 1000; 7405

There may be several specific safety messages on your engine. The exact location and a description of the safety messages are reviewed in this section. Become familiar with all safety messages.

Ensure that all of the safety messages are legible. Clean the safety messages or replace the safety messages if the words cannot be read or if the illustrations are not visible. Use a cloth, water, and soap to clean the safety messages. Do not use solvents, gasoline, or other harsh chemicals. Solvents, gasoline, or harsh chemicals could loosen the adhesive that secures the safety messages. The safety messages that are loosened could drop off the engine.

Replace any safety message that is damaged or missing. If a safety message is attached to a part of the engine that is replaced, install a new safety message on the replacement part. Your Caterpillar dealer can provide new safety messages.

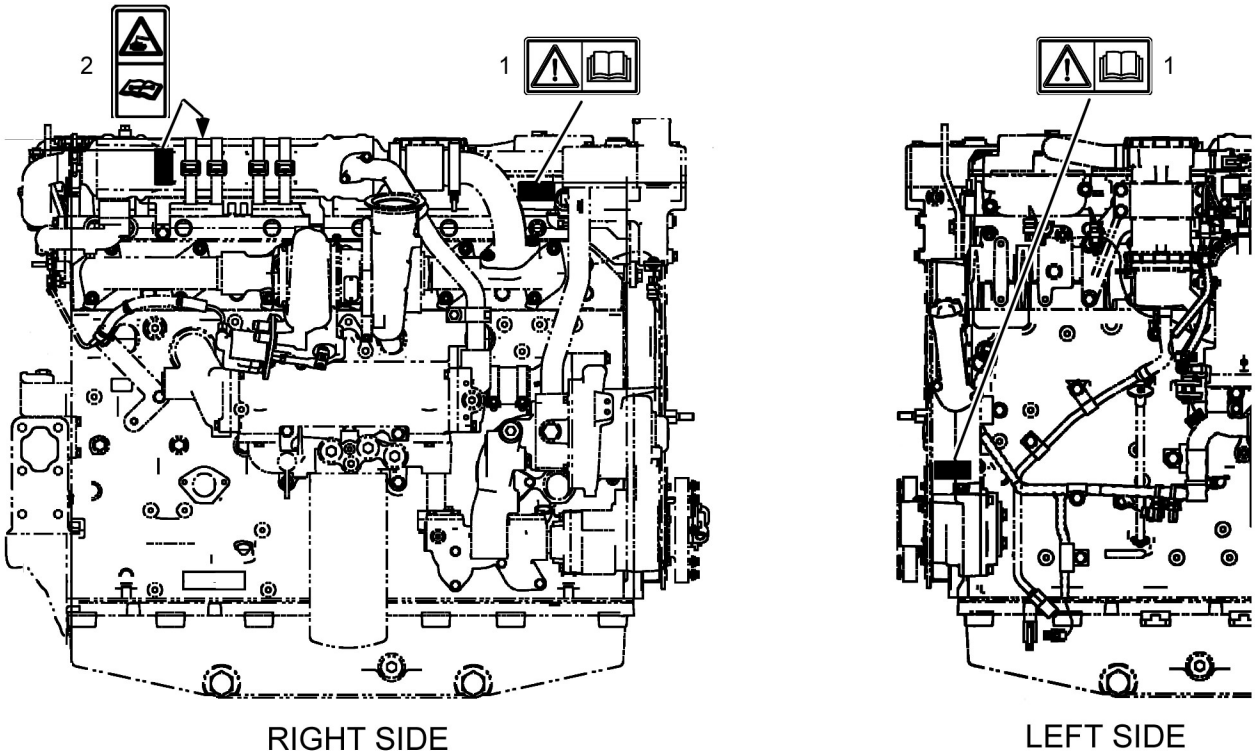

Illustration 1 g02292373

Universal Warning (1)

Illustration 2 g01370904

One safety message is located on the left side of the engine. One safety message is located on the right side of the engine.

WARNING

Do not operate or work on this equipment unless you have read and understand the instructions and warnings in the Operation and Maintenance Manual. Failure to follow the instructions or heed the warnings could result in injury or death. Contact any Caterpillar dealer for replacement manuals. Proper care is your responsibility.

Sulfuric Acid Burn (2)

Illustration 3 g01382725

One safety message for sulfuric acid burn is located on top of the exhaust cooler. One safety message for sulfuric acid burn is located on the right side of the exhaust cooler.

WARNING

Sulfuric Acid Burn Hazard may cause serious personal injury or death.

The exhaust gas cooler may contain a small amount of sulfuric acid. The use of fuel with sulfur levels greater than 15 ppm may increase the amount of sulfuric acid formed. The sulfuric acid may spill from the cooler during service of the engine. The sulfuric acid will burn the eyes, skin and clothing on contact. Always wear the appropriate personal protective equipment (PPE) that is noted on a material safety data sheet (MSDS) for sulfuric acid. Always follow the directions for first aid that are noted on a material safety data sheet (MSDS) for sulfuric acid.

i05422543

Additional Messages

SMCS Code: 1000; 7405

There are several specific messages on this engine. The exact location of the messages and the description of the information are reviewed in this section. Become familiar with all messages.

Make sure that all of the messages are legible. Clean the messages or replace the messages if you cannot read the words. Replace the illustrations if the illustrations are not legible. When you clean the messages, use a cloth, water, and soap. Do not use solvent, gasoline, or other harsh chemicals to clean the messages. Solvents, gasoline, or harsh chemicals could loosen the adhesive that secures the messages. Loose adhesive will allow the messages to fall.

Replace any message that is damaged, or missing. If a message is attached to a part that is replaced, install a message on the replacement part. Any Cat dealer can provide new messages.

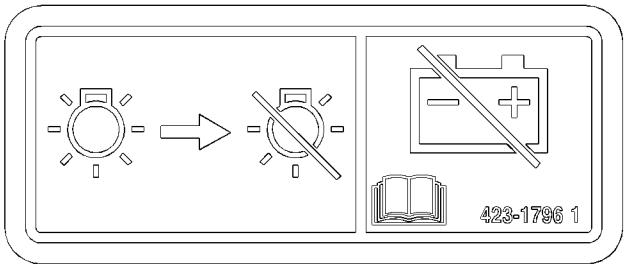

Illustration 4 g03422039

Purge notice message

This notice is located next to the battery disconnect switch.

NOTICE

Do not turn the battery power disconnect switch off until indicator lamp has turned off. If the switch is turned off when the light is illuminated then the DEF system will not purge and DEF could freeze and cause damage to the pump and lines.

i05334609

General Hazard Information

SMCS Code: 1000; 4450; 7405

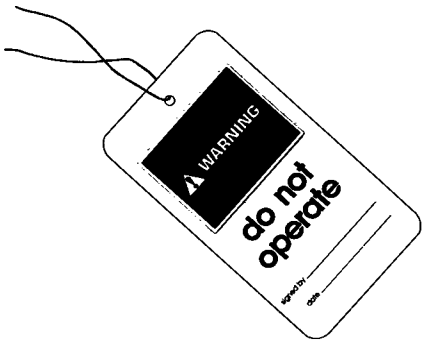

Illustration 5 g00104545

Attach a "Do Not Operate" warning tag to the start switch or controls before the engine is serviced or repaired. These warning tags (Special Instruction, SEHS7332) are available from your Cat dealer. Attach the warning tags to the engine and to each operator control station. When appropriate, disconnect the starting controls.

Do not allow unauthorized personnel on the engine, or around the engine when the engine is being serviced.

Cautiously remove the following parts. To help prevent spraying or splashing of pressurized fluids, hold a rag over the part that is being removed.

- Filler caps
- Grease fittings
- Pressure taps
- Breathers
- Drain plugs

Use caution when cover plates are removed. Gradually loosen, but do not remove the last two bolts or nuts that are located at opposite ends of the cover plate or the device. Before removing the last two bolts or nuts, pry the cover loose in order to relieve any spring pressure or other pressure.

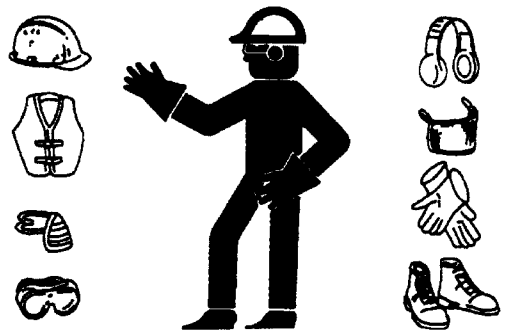

Illustration 6 g00702020

- Wear a hard hat, protective glasses, and other protective equipment, as required.
- When work is performed around an engine that is operating, wear protective devices for ears in order to help prevent damage to hearing.
- Do not wear loose clothing or jewelry that can snag on controls or on other parts of the engine.
- Ensure that all protective guards and all covers are secured in place on the engine.
- Never put maintenance fluids into glass containers. Glass containers can break.
- Use all cleaning solutions with care.
- Report all necessary repairs.

Unless other instructions are provided, perform the maintenance under the following conditions:

- The engine is stopped. Ensure that the engine cannot be started.
- The protective locks or the controls are in the applied position.
- Disconnect the batteries when maintenance is performed or when the electrical system is serviced. Disconnect the battery ground leads. Tape the leads in order to help prevent sparks.
- When starting a new engine, make provisions to stop the engine if an overspeed occurs. If an engine has not been started since service has been performed, make provisions to stop the engine if an overspeed occurs. Shutting down the engine may be accomplished by shutting off the fuel supply and/or the air supply to the engine.
- Do not attempt any repairs that are not understood. Use the proper tools. Replace any equipment that is damaged or repair the equipment.
- Start the engine with the operator controls. Never short across the starting motor terminals or the batteries. This method of starting the engine could bypass the engine neutral start system and/or the electrical system could be damaged.

Pressurized Air and Water

Pressurized air and/or water can cause debris and/or hot water to be blown out which could result in personal injury.

The maximum air pressure for cleaning purposes must be reduced to 205 kPa (30 psi) when the air nozzle is deadheaded and used with effective chip guarding (if applicable) and personal protective equipment. The maximum water pressure for cleaning purposes must be below 275 kPa (40 psi).

When pressurized air and/or pressurized water is used for cleaning, wear protective clothing, protective shoes, and eye protection. Eye protection includes goggles or a protective face shield. Always wear eye protection for cleaning the cooling system.

Avoid direct spraying of water on electrical connectors, connections, and components. When using air for cleaning, allow the machine to cool to reduce the possibility of fine debris igniting when redeposited on hot surfaces.

Fluid Penetration

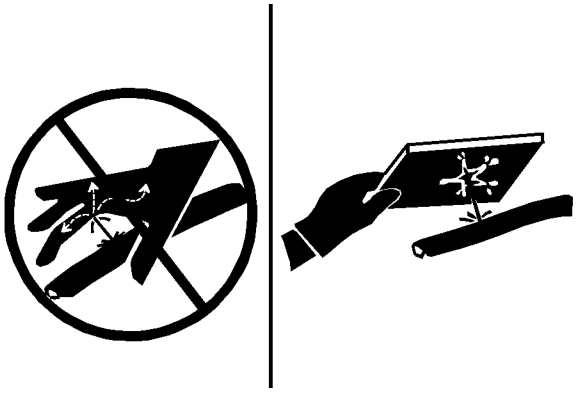

Illustration 7 g00687600

Always use a board or cardboard when you check for a leak. Leaking fluid that is under pressure can penetrate body tissue. Fluid penetration can cause serious injury and possible death. A pin hole leak can cause severe injury. If fluid is injected into your skin, you must get treatment immediately. Seek treatment from a doctor that is familiar with this type of injury.

Containing Fluid Spillage

NOTICE

Care must be taken to ensure that fluids are contained during performance of inspection, maintenance, testing, adjusting, and repair of the product. Be prepared to collect the fluid with suitable containers before opening any compartment or disassembling any component containing fluids.

Refer to Special Publication, NENG2500, “Cat Dealer Service Tool Catalog” or refer to Special Publication, PECJ0003, “Cat Shop Supplies and Tools Catalog” for tools and supplies suitable to collect and contain fluids on Cat products.

Dispose of all fluids according to local regulations and mandates.

Static Electricity Hazard when Fueling with Ultra-low Sulfur Diesel Fuel

The removal of sulfur and other compounds in ultra-low sulfur diesel fuel (ULSD fuel) decreases the conductivity of ULSD and increases the ability of ULSD to store static charge. Refineries may have treated the fuel with a static dissipating additive. Many factors can reduce the effectiveness of the additive over time. Static charges can build up in ULSD fuel while the fuel is flowing through fuel delivery systems. Static electricity discharge when combustible vapors are present could result in a fire or explosion. Ensure that the entire system used to refuel your machine (fuel supply tank, transfer pump, transfer hose, nozzle, and others) is properly grounded and bonded. Consult with your fuel or fuel system supplier to ensure that the delivery system complies with fueling standards for proper grounding and bonding.

⚠ WARNING

Avoid static electricity risk when fueling. Ultra-low sulfur diesel fuel (ULSD fuel) poses a greater static ignition hazard than earlier diesel formulations with a higher sulfur contents. Avoid death or serious injury from fire or explosion. Consult with your fuel or fuel system supplier to ensure the delivery system is in compliance with fueling standards for proper grounding and bonding practices.

Lines, Tubes, and Hoses

Do not bend or strike high-pressure lines. Do not install lines, tubes, or hoses that are damaged.

Repair any fuel lines, oil lines, tubes, or hoses that are loose or damaged. Leaks can cause fires.

Inspect all lines, tubes, and hoses carefully. Do not use bare hands to check for leaks. Always use a board or cardboard for checking engine components for leaks. Tighten all connections to the recommended torque.

Check for the following conditions:

- End fittings that are damaged or leaking
- Outer covering that is chafed or cut
- Wire that is exposed in reinforced hose
- Outer covering that is ballooning locally
- Flexible part of the hose that is kinked or crushed
- Armoring that is embedded in the outer covering

Ensure that all of the clamps, the guards, and the heat shields are installed correctly. Correct installation of these components will help to prevent these effects: vibration, rubbing against other parts and excessive heat during operation.

Inhalation

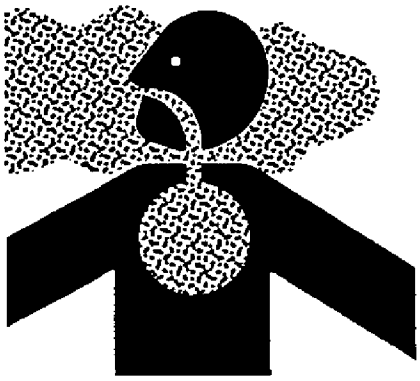

Illustration 8 g02159053

Exhaust

Use caution. Exhaust fumes can be hazardous to your health. If you operate the equipment in an enclosed area, adequate ventilation is necessary.

Asbestos Information

Cat equipment and replacement parts that are shipped from Caterpillar are asbestos free. Caterpillar recommends the use of only genuine Cat replacement parts. Use the following guidelines when you handle any replacement parts that contain asbestos or when you handle asbestos debris.

Use caution. Avoid inhaling dust that might be generated when you handle components that contain asbestos fibers. Inhaling this dust can be hazardous to your health. The components that may contain asbestos fibers are brake pads, brake bands, lining material, clutch plates, and some gaskets. The asbestos that is used in these components is bound in a resin or sealed in some way. Normal handling is not hazardous unless airborne dust that contains asbestos is generated.

If dust that may contain asbestos is present, there are several guidelines that should be followed:

- Never use compressed air for cleaning.
- Avoid brushing materials that contain asbestos.
- Avoid grinding materials that contain asbestos.
- Use a wet method in order to clean up asbestos materials.
- A vacuum cleaner that is equipped with a high efficiency particulate air filter (HEPA) can also be used.
- Use exhaust ventilation on permanent machining jobs.
- Wear an approved respirator if there is no other way to control the dust.
- Comply with applicable rules and regulations for the work place. In the United States, use Occupational Safety and Health Administration (OSHA) requirements. These OSHA requirements can be found in “29 CFR 1910.1001”.
- Obey environmental regulations for the disposal of asbestos.
- Stay away from areas that might have asbestos particles in the air.

Softwrap

Keep the engine room ventilation operating at full capacity. Wear a particulate respirator that has been approved by the National Institute of Occupational Safety and Health (NIOSH). Wear appropriate protective clothing in order to minimize direct contact. Use good hygiene practices and wash hands thoroughly after handling Softwrap material. Do not smoke until washing hands thoroughly after handling Softwrap material. Clean up debris with a vacuum or by wet sweeping. Do not use pressurized air to clean up debris.

Reference: The applicable material safety data sheets can be found at the following web site by searching using part number or the name:

http://dsf2ws.cat.com/msds/servlet/cat.cis.ecs.msdsSearch.controller.UserIdentificationDisplayServlet

Dispose of Waste Properly

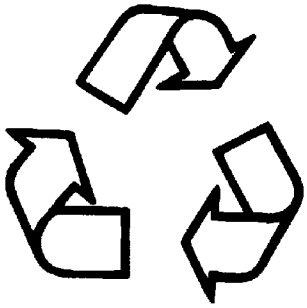

Illustration 9 g00706404

Improperly disposing of waste can threaten the environment. Potentially harmful fluids should be disposed of according to local regulations.

Always use leakproof containers when you drain fluids. Do not pour waste onto the ground, down a drain, or into any source of water.

i03895768

Burn Prevention

SMCS Code: 1000; 4450; 7405

Do not touch any part of an operating engine or engine aftertreatment system. Allow the engine or the engine aftertreatment system to cool before any maintenance is performed on the engine or the engine aftertreatment system. Relieve all pressure in the appropriate system before any lines, fittings or related items are disconnected.

Coolant

When the engine is at operating temperature, the engine coolant is hot. The coolant is also under pressure. The radiator and all lines to the heaters or to the engine contain hot coolant. Any contact with hot coolant or with steam can cause severe burns. Allow cooling system components to cool before the cooling system is drained.

Check the coolant level after the engine has stopped and the engine has been allowed to cool. Ensure that the filler cap is cool before removing the filler cap. The filler cap must be cool enough to touch with a bare hand. Remove the filler cap slowly in order to relieve pressure.

Cooling system conditioner contains alkali. Alkali can cause personal injury. Do not allow alkali to contact the skin, the eyes, or the mouth.

Oils

Hot oil and hot lubricating components can cause personal injury. Do not allow hot oil or hot components to contact the skin.

If the application has a makeup tank, remove the cap for the makeup tank after the engine has stopped. The filler cap must be cool to the touch.

Batteries

The liquid in a battery is an electrolyte. Electrolyte is an acid that can cause personal injury. Do not allow electrolyte to contact the skin or the eyes.

Do not smoke while checking the battery electrolyte levels. Batteries give off flammable fumes which can explode.

Always wear protective glasses when you work with batteries. Wash hands after touching batteries. The use of gloves is recommended.

i05379100

Fire Prevention and Explosion Prevention

SMCS Code: 1000; 4450; 7405

Illustration 10 g00704000

All fuels, most lubricants, and some coolant mixtures are flammable.

Flammable fluids that are leaking or spilled onto hot surfaces or onto electrical components can cause a fire. Fire may cause personal injury and property damage.

A flash fire may result if the covers for the engine crankcase are removed within 15 minutes after an emergency shutdown.

Determine whether the engine will be operated in an environment that allows combustible gases to be drawn into the air inlet system. These gases could cause the engine to overspeed. Personal injury, property damage, or engine damage could result.

If the application involves the presence of combustible gases, consult your Cat dealer for additional information about suitable protection devices.

Remove all flammable materials such as fuel, oil, and debris from the engine. Do not allow any flammable materials to accumulate on the engine.

Store fuels and lubricants in properly marked containers away from unauthorized persons. Store oily rags and any flammable materials in protective containers. Do not smoke in areas that are used for storing flammable materials.

Do not expose the engine to any flame.

Exhaust shields (if equipped) protect hot exhaust components from oil or fuel spray in a line, a tube, or a seal failure. Exhaust shields must be installed correctly.

Do not weld on lines or tanks that contain flammable fluids. Do not flame cut lines or tanks that contain flammable fluid. Clean any such lines or tanks thoroughly with a nonflammable solvent prior to welding or flame cutting.

Wiring must be kept in good condition. Check all electrical wires daily. Ensure that all electrical wires are properly routed and securely attached. Repair any wires that are loose or frayed before you operate the engine. Clean all electrical connections and tighten all electrical connections.

Eliminate all wiring that is unattached or unnecessary. Do not use any wires or cables that are smaller than the recommended gauge. Do not bypass any fuses and/or circuit breakers.

Arcing or sparking could cause a fire. Secure connections, recommended wiring, and properly maintained battery cables will help to prevent arcing or sparking.

Inspect all lines and hoses for wear or for deterioration. Properly route all hoses. The lines and hoses must have adequate support and secure clamps. Tighten all connections to the recommended torque. Leaks can cause fires.

Properly install all oil filters and fuel filters. The filter housings must be tightened to the proper torque.

Illustration 11 g00704059

Use caution when you are refueling an engine. Do not smoke while you are refueling an engine. Do not refuel an engine near open flames or sparks. Always stop the engine before refueling. Fill the fuel tank outdoors. Properly clean areas of spillage.

Avoid static electricity risk when fueling. Ultra low sulfur diesel (ULSD) poses a greater static ignition hazard that earlier diesel formulation with a higher sulfur content. Avoid death or serious injury from the fire or explosion. Consult with your fuel or fuel system supplier to ensure that the delivery system is in compliance with fueling standards for proper grounding and bonding practices.

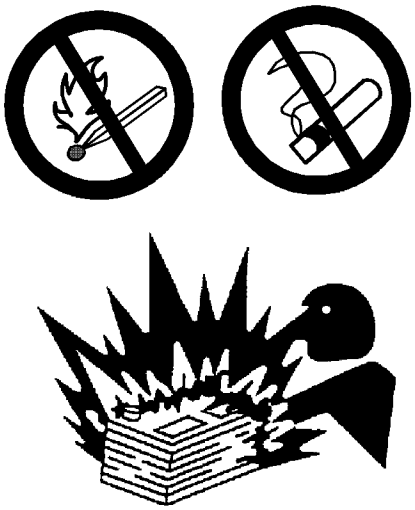

Illustration 12 g02298225

Gases from a battery can explode. Keep any open flames or sparks away from the top of a battery. Do not smoke in battery charging areas.

Never check the battery charge by placing a metal object across the terminal posts. Use a voltmeter or a hydrometer.

Improper jumper cable connections can cause an explosion that can result in injury. Refer to the Operation Section of this manual for specific instructions.

Do not charge a frozen battery. Charging a frozen battery may cause an explosion.

The batteries must be kept clean. The covers (if equipped) must be kept on the cells. Use the recommended cables, connections, and battery box covers when the engine is operated.

Fire Extinguisher

Make sure that a fire extinguisher is available. Be familiar with the operation of the fire extinguisher. Inspect the fire extinguisher and service the fire extinguisher regularly. Obey the recommendations on the instruction plate.

Ether

WARNING

Do not use ether. This machine is equipped with glow plugs. Using ether can create explosions or fires that can cause personal injury or death. Read and follow the engine starting procedure in the Operation and Maintenance Manual.

Lines, Tubes, and Hoses

Do not bend high-pressure lines. Do not strike high-pressure lines. Do not install any lines that are bent or damaged.

Repair any lines that are loose or damaged. Leaks can cause fires. Consult your Cat dealer for repair or for replacement parts.

Check lines, tubes, and hoses carefully. Do not use your bare hand to check for leaks. Use a board or cardboard to check for leaks. Tighten all connections to the recommended torque.

Replace the parts if any of the following conditions are present:

- End fittings are damaged or leaking.
- Outer coverings are chafed or cut.
- Wires are exposed.
- Outer coverings are ballooning.
- Flexible parts of the hoses are kinked.
- Outer covers have embedded armoring.
- End fittings are displaced.

Make sure that all clamps, guards, and heat shields are installed correctly in order to revent vibration, rubbing against other parts, and excessive heat.

i01359666

Crushing Prevention and Cutting Prevention

SMCS Code: 1000; 4450; 7405

Support the component properly when work beneath the component is performed.

Unless other maintenance instructions are provided, never attempt adjustments while the engine is running.

Stay clear of all rotating parts and of all moving parts. Leave the guards in place until maintenance is performed. After the maintenance is performed, reinstall the guards.

Keep objects away from moving fan blades. The fan blades will throw objects or cut objects.

When objects are struck, wear protective glasses in order to avoid injury to the eyes.

Chips or other debris may fly off objects when objects are struck. Before objects are struck, ensure that no one will be injured by flying debris.

i01372247

Mounting and Dismounting

SMCS Code: 1000; 4450; 7405

Inspect the steps, the handholds, and the work area before mounting the engine. Keep these items clean and keep these items in good repair.

Mount the engine and dismount the engine only at locations that have steps and/or handholds. Do not climb on the engine, and do not jump off the engine.

Face the engine in order to mount the engine or dismount the engine. Maintain a three-point contact with the steps and handholds. Use two feet and one hand or use one foot and two hands. Do not use any controls as handholds.

Do not stand on components which cannot support your weight. Use an adequate ladder or use a work platform. Secure the climbing equipment so that the equipment will not move.

Do not carry tools or supplies when you mount the engine or when you dismount the engine. Use a hand line to raise and lower tools or supplies.

i03560601

Before Starting Engine

SMCS Code: 1000

NOTICE

For initial start-up of a new or rebuilt engine, and for start-up of an engine that has been serviced, make provision to shut the engine off should an overspeed occur. This may be accomplished by shutting off the air and/or fuel supply to the engine.

WARNING

Engine exhaust contains products of combustion which may be harmful to your health. Always start and operate the engine in a well ventilated area and, if in an enclosed area, vent the exhaust to the outside.

Inspect the engine for potential hazards.

Do not start the engine or move any of the controls if there is a “DO NOT OPERATE” warning tag or similar warning tag attached to the start switch or to the controls.

Before starting the engine, ensure that no one is on, underneath, or close to the engine. Ensure that the area is free of personnel.

If equipped, ensure that the lighting system for the engine is suitable for the conditions. Ensure that all lights work properly, if equipped.

All protective guards and all protective covers must be installed if the engine must be started in order to perform service procedures. To help prevent an accident that is caused by parts in rotation, work around the parts carefully.

Do not bypass the automatic shutoff circuits. Do not disable the automatic shutoff circuits. The circuits are provided in order to help prevent personal injury. The circuits are also provided in order to help prevent engine damage.

See the Service Manual for repairs and for adjustments.

i04021433

Engine Starting

SMCS Code: 1000

If a warning tag is attached to the engine start switch or to the controls, DO NOT start the engine or move the controls. Consult with the person that attached the warning tag before the engine is started.

All protective guards and all protective covers must be installed if the engine must be started in order to perform service procedures. To help prevent an accident that is caused by parts in rotation, work around the parts carefully.

Start the engine from the operator's compartment or from the engine start switch.

Always start the engine according to the procedure that is described in this Operation and Maintenance Manual, “Engine Starting” topic (Operation Section). Knowledge of the correct procedure will help to prevent major damage to the engine components. Knowledge of the procedure will also help to prevent personal injury.

To ensure that the jacket water heater (if equipped) and/or the lube oil heater (if equipped) is working properly, check the water temperature gauge and the oil temperature gauge during the heater operation.

Engine exhaust contains products of combustion that can be harmful to your health. Always start the engine and operate the engine in a ventilated area. If the engine is started in an enclosed area, vent the engine exhaust to the outside.

i05426630

Engine Stopping

SMCS Code: 1000

Do not stop the engine immediately after the machine has been operated under load. This can cause overheating and accelerated wear of engine components.

After the machine is parked and the parking brake is engaged, allow the engine to run for five minutes before shutdown. Running the engine allows hot areas of the engine to cool gradually.

i02469632

Electrical System

SMCS Code: 1000; 1400

Never disconnect any charging unit circuit or battery circuit cable from the battery when the charging unit is operating. A spark can cause the combustible gases that are produced by some batteries to ignite.

To help prevent sparks from igniting combustible gases that are produced by some batteries, the negative "−" jump start cable should be connected last from the external power source to the negative "−" terminal of the starting motor. If the starting motor is not equipped with a negative "−" terminal, connect the jump start cable to the engine block.

Check the electrical wires daily for wires that are loose or frayed. Tighten all loose electrical wires before the engine is started. Repair all frayed electrical wires before the engine is started. Refer to the "Engine Starting" section of this Operation and Maintenance Manual for specific starting instructions.

Grounding Practices

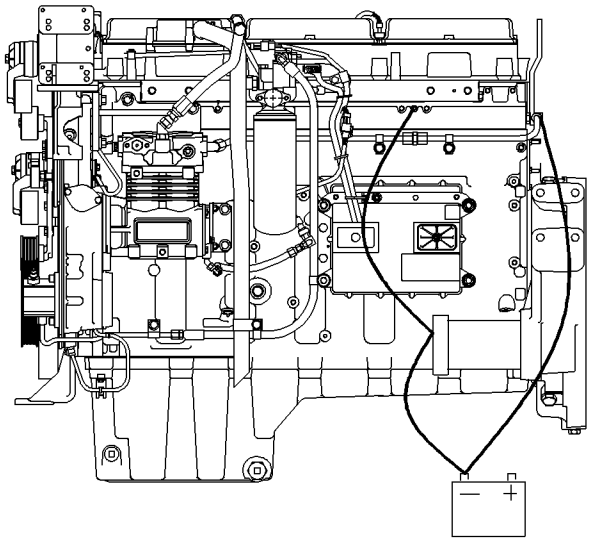

Illustration 13 g00771448

Typical example

Grounding Stud To Battery Ground

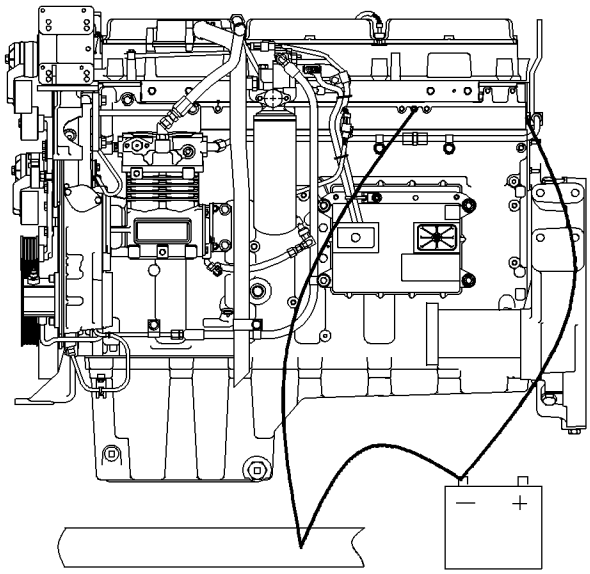

Illustration 14 g00771487

Typical example

Alternate Grounding Stud To Battery Ground

Proper grounding for the engine electrical system is necessary for optimum engine performance and reliability. Improper grounding will result in uncontrolled electrical circuit paths and in unreliable electrical circuit paths.

Uncontrolled electrical circuit paths can result in damage to main bearings, to crankshaft bearing journal surfaces, and to aluminum components.

Engines that are installed without engine-to-frame ground straps can be damaged by electrical discharge.

To ensure that the engine and the engine electrical systems function properly, an engine-to-frame ground strap with a direct path to the battery must be used. This path may be provided by way of a starting motor ground, a starting motor ground to the frame, or a direct engine ground to the frame.

All grounds should be tight and free of corrosion. The engine alternator must be grounded to the negative "-" battery terminal with a wire that is adequate to handle the full charging current of the alternator.

i04021529

Engine Electronics

SMCS Code: 1000; 1900

WARNING

Tampering with the electronic system installation or the OEM wiring installation can be dangerous and could result in personal injury or death and/or engine damage.

The Electronic Control Module (ECM) provides a comprehensive, programmable engine monitoring system for this engine. The ECM monitors specific engine operating parameters in order to detect abnormal conditions that may develop. The ECM will generate an event code if a specific engine parameter exceeds an acceptable range that is defined by the engine monitoring system. The ECM will react with an action that is dependent on the severity of the condition. For information on event codes, refer to this Operation and Maintenance Manual, "Event Codes" topic (Operation Section) The following actions may be initiated by the ECM. These actions are dependent on the severity of the condition:

- Illumination of a warning lamp or warning alarm
- Engine derate
- Engine protection shutdown

The Engine Monitoring package can vary for different engine models and different engine applications. However, the monitoring system and the engine monitoring control will be similar for all engines.

Note: Many of the engine control systems and display modules that are available for Caterpillar Engines will work in unison with the Engine Monitoring System. Together, the two controls will provide the engine monitoring function for the specific engine application. Refer to the Troubleshooting Manual for more information.

Product Information Section

General Information

i04275070

Product Description

SMCS Code: 1000; 4450; 4491

The Cat C13 Industrial Engines have the following characteristics:

- Four-stroke cycle
- Mechanically actuated, electronically controlled fuel injection system
- Turbocharged

Engine Specifications

Note: The front end of the engine is opposite the flywheel end of the engine. The left and the right sides of the engine are determined from the flywheel end. The number 1 cylinder is the front cylinder.

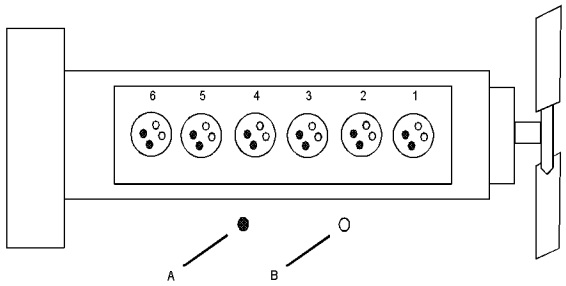

Illustration 15 g01387009

Cylinder and valve location

(A) Exhaust valve
(B) Inlet valve

Table 1

Engine Specifications	
Engine	**C13**
Arrangement and Cylinders	In-Line 6 cylinder
Bore	130 mm (5.1 inch)
Stroke	157 mm (6.2 inch)

(continued)

(Table 1, contd)

Aspiration	ATAAC[1]
Displacement	12.5 L (763 cubic inch)
Firing Order	1-5-3-6-2-4
Rotation (flywheel end)	Counterclockwise

(1) Air-to-air aftercooled

Electronic Engine Features

The Cat C13 Industrial Engine is designed for electronic controls. The integral on board computer controls the operation of the engine. Current operating conditions are monitored. The Electronic Control Module (ECM) controls the response of the engine to these conditions and to the demands of the operator. These conditions and operator demands determine the precise control of fuel injection by the ECM. The electronic engine control system provides the following features:

- Engine speed governor
- Automatic air/fuel ratio control
- Torque rise shaping
- Injection timing control
- System diagnostics
- Aftertreatment regeneration control
- NOX reduction system control

Additional Features

The following additional features provide increased engine fuel economy and serviceability:

- Cold starting capability
- Tampering detection
- Diagnostics

Engine Service Life

Engine efficiency and maximum utilization of engine performance depend on the adherence to proper operation and maintenance recommendations. In addition, use recommended fuels, coolants, and lubricants. Use the Operation and Maintenance Manual as a guide for required engine maintenance.

Expected engine life is predicted by the average power that is demanded. The average power that is demanded is based on fuel consumption of the engine over a time. Reduced hours of operation at full throttle and/or operating at reduced throttle settings result in a lower average power demand. Reduced hours of operation will increase the length of operating time before an engine overhaul is required. For more information, refer to the Operation and Maintenance Manual, “Overhaul Considerations” topic.

Aftermarket Products and Cat Engines

When auxiliary devices, accessories, or consumables (filters, additives, catalysts, etc.) which are made by other manufacturers are used on Cat products, the Caterpillar warranty is not affected simply because of such use.

However, failures that result from the installation or use of devices, accessories, or consumables from other manufacturers are NOT Cat defects. Therefore, the defects are NOT covered under the Caterpillar warranty.

Product Identification Information

i05269788

Plate Locations and Film Locations

SMCS Code: 1000; 4450

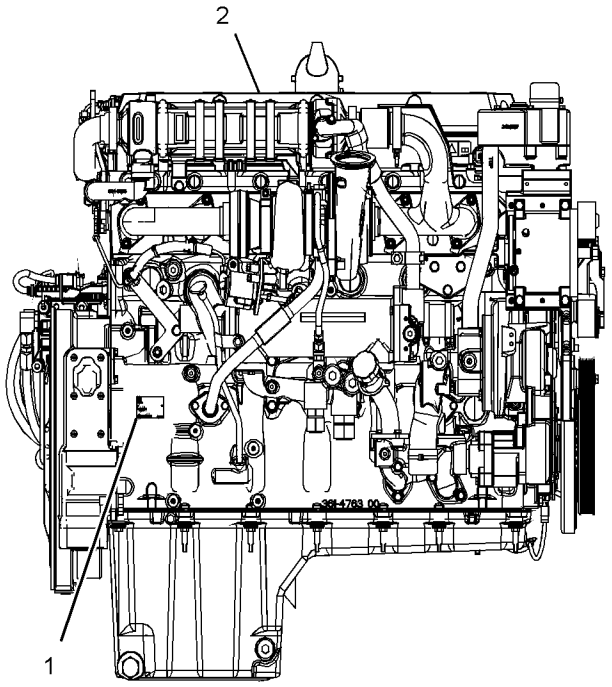

Illustration 16 g02446959

(1) Serial number plate
(2) Information plate

The engine serial number plate is located on the right side of the engine block, toward the back.

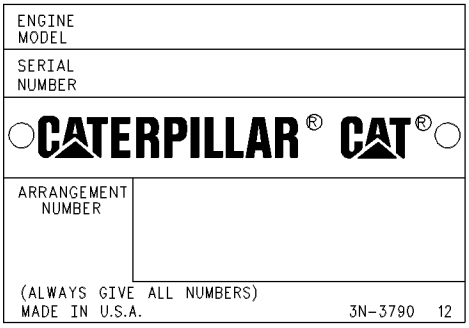

Illustration 17 g00123229

Serial number plate

The following information is stamped on the serial number plate: engine serial number, engine model and arrangement number.

The engine information plate is located on top of the valve cover near the middle of the engine.

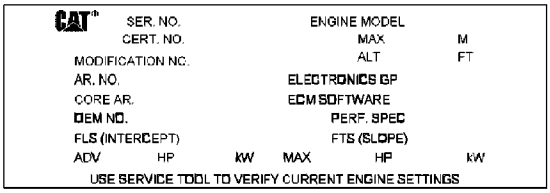

Illustration 18 g01347963

Engine information plate

The following information is on the information plate: engine serial number, engine model, engine arrangement number, maximum altitude of the engine that is necessary to achieve the rated power, horsepower, high idle, full load rpm, fuel settings and other information

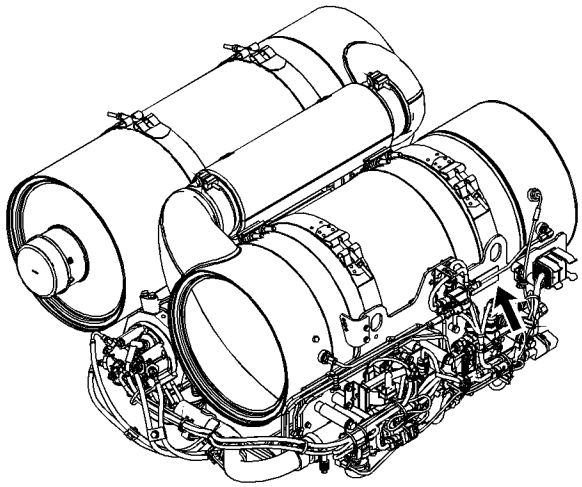

Illustration 19 g02446896

View of the exhaust system of a C13 Well Service Engine

The Clean Emission Module (CEM) identification plate is located on the electronics plate for the CEM.

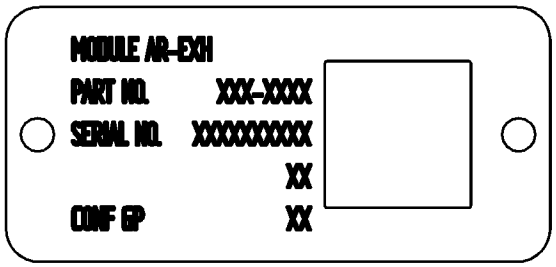

Illustration 20 g02236574

CEM plate

The CEM identification plate contains the following information: part number, serial number, change level and configuration ID code. This information may be needed by the Cat dealer when inquiries are being made on the CEM.

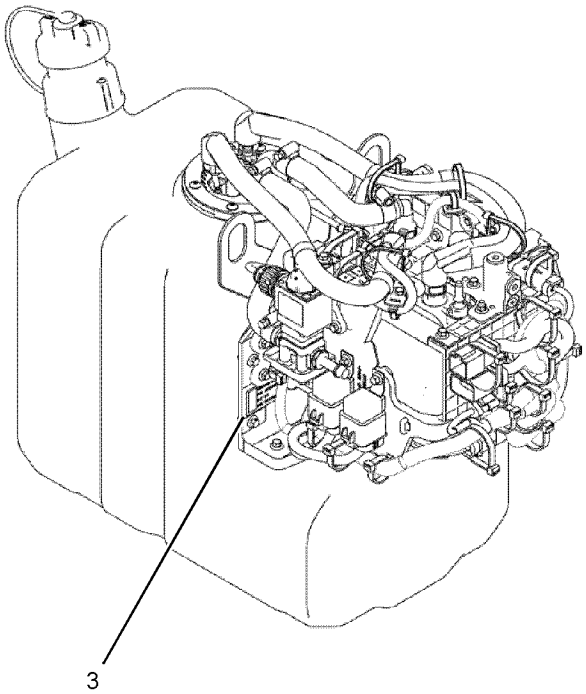

Illustration 21 g03354103

DEF module

(3) plate location

The DEF module identification plate (3) contains the following information: part number, serial number and change level. This information may be needed by the Cat dealer when inquiries are being made on the DEF.

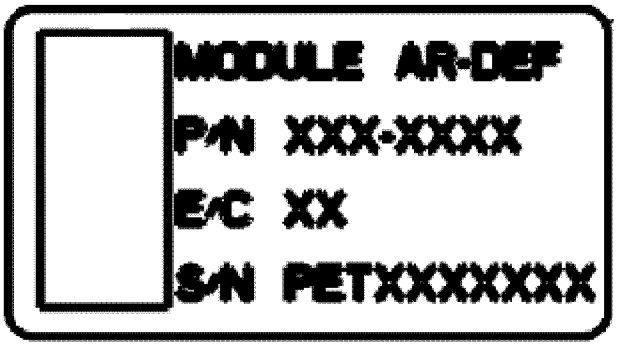

Illustration 22 g03354108

DEF plate

i03649981

Emissions Certification Film

SMCS Code: 1000; 7405

Note: This information is pertinent in the United States, in Canada and in Europe.

Consult your Caterpillar dealer for an Emission Control Warranty Statement.

This label is located on the engine.

i01382270

Reference Information

SMCS Code: 1000; 4450

Identification of the items in Table 2 may be needed in order to obtain parts and service. Some of the information is on the engine Serial Number Plate and/or Information Plate. Locate the information for your engine. Record the information on the appropriate space in Table 2 . Make a copy of this list for a record. Retain the information for future reference.

The top level part numbers in the Parts Manual for the engine are listed with the engine arrangement number. Occasionally, an arrangement may be slightly modified before the product is shipped from the factory. In these cases, a modification number indicates that the arrangement has been modified.

The packaging arrangement may also be called a pricing arrangement or a customer arrangement. This is the total package with attachments and options that are not included in the engine arrangement.

The performance specification can be used by your Caterpillar dealer with the Technical Marketing Information system. Before the engine leaves the factory, the engine performance is tested. Detailed performance data is recorded. The performance specification number can be used for obtaining the data.

Table 2

Reference Information	
Engine Model	
Serial Number	
Arrangement Number	
Modification Number	
Packaging Arrangement	
Turbocharger	
Fuel Filter Element	
Lubrication Oil Filter Element	

(continued)

(Table 2, contd)

Auxiliary Oil Filter Element	
Air Cleaner Element	
Fan Drive Belt	
Alternator Belt	
Capacity of the Lubrication System	
Capacity of the Cooling System	
Performance Specification Number	
Personality Module	
Low Idle rpm	
High Idle rpm	
Full Load rpm	
Power Rating	

Operation Section

Lifting and Storage

i05271665

Product Lifting

SMCS Code: 7000; 7002

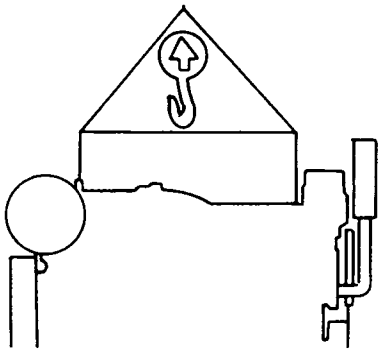

Illustration 23 g00103219

NOTICE
Never bend the eyebolts and the brackets. Only load the eyebolts and the brackets under tension. Remember that the capacity of an eyebolt is less as the angle between the supporting members and the object becomes less than 90 degrees.

When it is necessary to remove a component at an angle, only use a link bracket that is properly rated for the weight.

Use a hoist to remove heavy components. Use an adjustable lifting beam to lift the engine. All supporting members (chains and cables) should be parallel to each other. The chains and cables should be perpendicular to the top of the object that is being lifted.

Some removals require lifting the fixtures in order to obtain proper balance and safety.

To remove the engine ONLY, use the lifting eyes that are on the engine.

Lifting eyes are designed and installed for the specific engine arrangement. Alterations to the lifting eyes and/or the engine make the lifting eyes and the lifting fixtures obsolete. If alterations are made, ensure that proper lifting devices are provided. Consult your Caterpillar dealer for information regarding fixtures for proper engine lifting.

Engine and Factory Mounted CEM

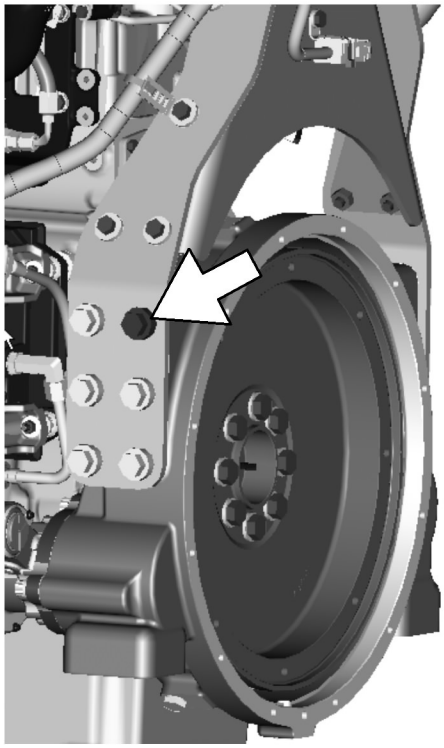

Illustration 24 g03389668

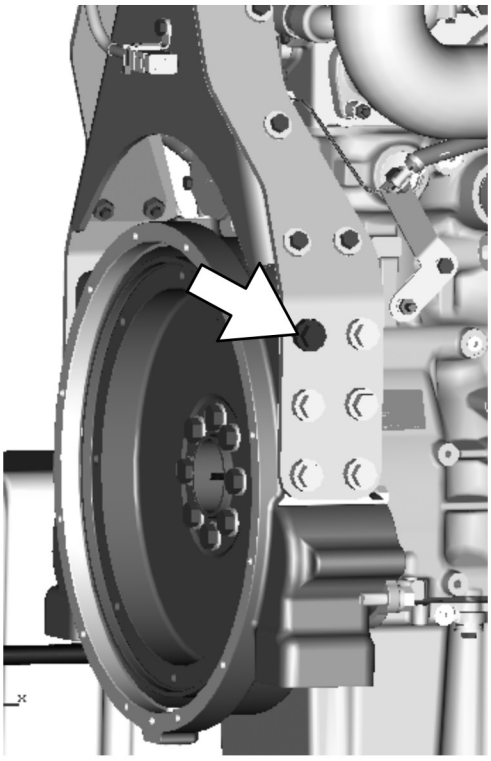

Illustration 25 g03391555

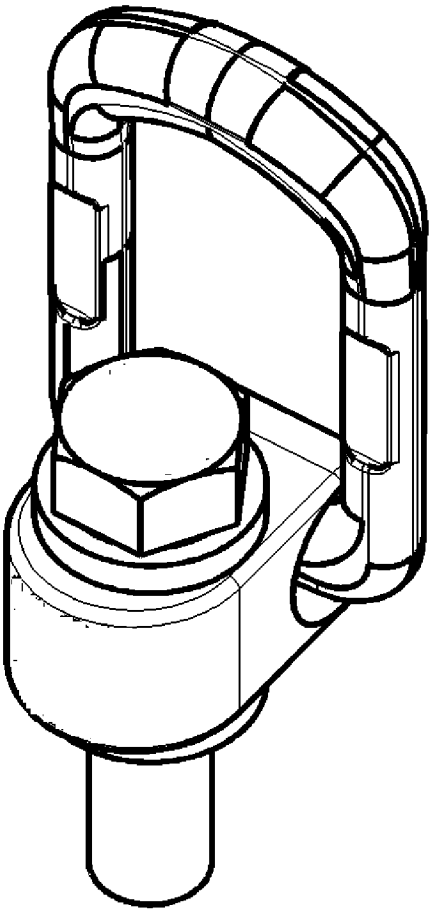

Illustration 26 g03389702
load ring

Engines with a factory mounted CEM (with or without a factory mounted radiator) can be lifted. Use the front engine lift eye, load rings fastened into the side mount pads of the flywheel housing, and a certified spreader bar.

Refer to the Special Publication, NENG2500, “Cat Dealer Service Tool Catalog” for the latest in below the hook lifting devise part numbers. Follow the safety instructions for the selected tool to ensure a safe lift. For most packages, the recommended spreader bar is 6V-6146 set at 142 cm (56 inch) with the lift hook locations set at approximately 3/4 of the way toward the front stop (closest to the front engine lift eye). The recommended load ring is 433-3002, which has additional bolt length to offset the thickness of the CEM mounting bracket. Place the load ring in the top-most, outer side-mount hole locations on either side of the flywheel housing.

Remove any ATAAC lines, air cleaners, or other attachments that would otherwise interfere with the lift chains or other lifting devises.

The engine package center of gravity will change depending on the engine attachments. Adjust the spreader bar and chains as necessary to maintain a lift within 5 degrees of horizontal in all directions.

Engine and Installed Radiator Only

The engine lifting eyes are rated to lift an engine with attached radiator, assuming a less than 5 degree tilt angle can be maintained. Be sure to use an appropriate spreader set so that lifting chains are perpendicular to the engine.

Radiator Only

In order to lift at the top of the radiator tank, detach the radiator, and mounting bracket at the engine front support. Add eyebolts or lifting brackets to the threaded holes marked for lifting.

Clean Emission Module Lifting

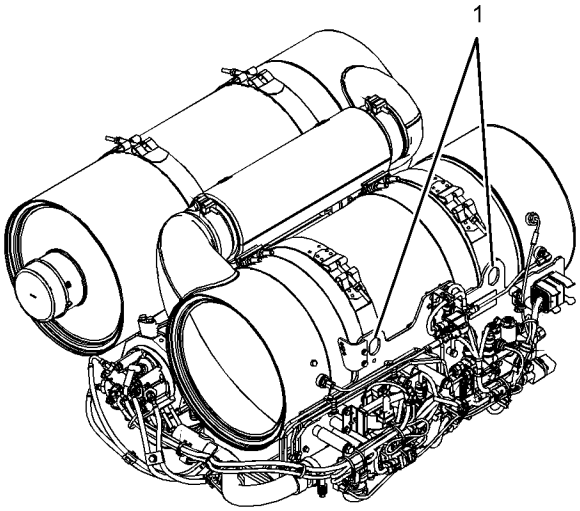

Illustration 27 g03354116
typical example
Side A

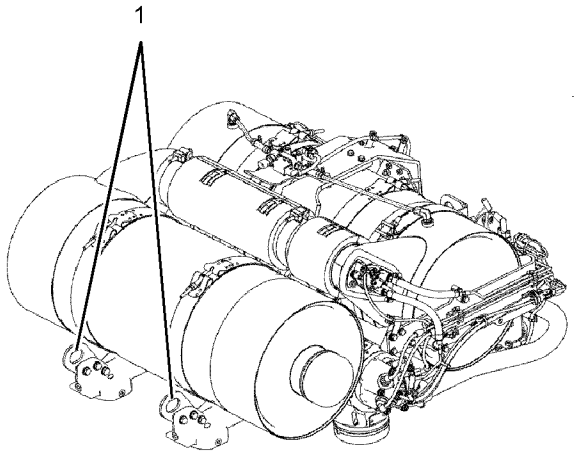

Illustration 28 g03354117
typical example
Side B

The Clean Emission Module (CEM) should only be lifted by the designated lifting eyes (1). Lifting eye locations will be different depending on the CEM arrangement. Do not attempt to lift the CEM using straps around the diesel particulate filter.

NOTICE
Do not attempt to use the radiator or CEM lift points to aid in the engine package lift.

i05299684

Product Storage

SMCS Code: 7002

Storage (Less Than One Year)

If an engine is not used, oil can run off the following parts that normally receive lubrication: cylinder walls, piston rings, main bearings, connecting rod bearings, crankshaft and gears.

This lack of lubricant allows corrosion to begin to appear on the metal. This condition is worse in areas of high humidity.

When the engine is started again, metal to metal contact will cause wear before the surfaces receive oil. To minimize this wear, use the starter to turn the engine with the throttle in the FUEL OFF position. When oil pressure is shown on the pressure gauge, start the engine.

1. Clean the engine of any dirt, rust, grease, and oil. Inspect the exterior. Paint areas that contain paint damage with a good quality paint.
2. Remove dirt from the air cleaners. Check all seals, gaskets, and the filter element for damage.
3. Apply lubricant to all points in this Operation and Maintenance Manual, “Maintenance Interval Schedule”.
4. Drain the crankcase oil. Replace the crankcase oil and change the oil filters. For the proper procedure, refer to this Operation and Maintenance Manual.
5. If the engine is equipped with an air starting motor, fill the reservoir with the following mixture: 50 percent volatile corrosion inhibitor oil (<nomen>VCI oil</nomen>) and 50 percent engine oil.
6. Add VCI oil to the crankcase oil. The volume of VCI oil in the crankcase oil should be 3 to 4 percent.

Note: If the engine crankcase is full, drain enough engine oil so the mixture can be added.

7. Remove the air filter elements. Turn the engine at cranking speed with the throttle control in FUEL OFF position. Use a sprayer to add a mixture of 50 percent VCI oil and 50 percent engine oil into the air inlet or turbocharger inlet.

Note: The mixture of VCI oil can be added to the inlet by removing the plug for checking turbocharger boost pressure. The minimum application rate for the VCI oil mixture is 5.5 mL per L (3 oz per 1000 cu in) of engine displacement.

8. Use a sprayer to apply a mixture of 50 percent VCI oil and 50 percent crankcase oil into the exhaust openings. The minimum application rate for the oil mixture is 5.5 mL per L (3 oz per 1000 cu in) of engine displacement. Seal the exhaust pipe and seal any drain holes in the muffler.
9. Remove the fuel from the secondary fuel filter housing. Alternately, empty and reinstall the spin-on fuel filter element in order to remove any dirt and water. Drain any sleeve metering fuel pump.

   Clean the primary fuel filter. Fill with calibration fluid or kerosene. Install the primary fuel filter and operate the priming pump. This procedure will send clean oil to the secondary filter and the engine.

Open the fuel tank drain valve in order to drain any water and dirt from the fuel tank. Apply a spray of calibration fluid or kerosene at the rate of 30 mL per 30 L (1 oz per 7.50 gal US) of fuel tank capacity in order to prevent rust in the fuel tank. Add 0.15 mL per L (.02 oz per 1 gal US) of commercial biocide such as Biobor JF to the fuel.

Apply a small amount of oil to the threads on the fuel tank filler neck and install the cap. Seal all openings to the tank in order to prevent evaporation of the fuel and as a preservative.

10. Remove the fuel nozzles or spark plugs. Apply 30 mL (1 oz) of the mixture of oils (50 percent VCI oil and 50 percent engine oil) into each cylinder.

Use a bar or a turning tool in order to turn over the engine slowly. This procedure puts the oil on the cylinder walls. Install all fuel nozzles or spark plugs and tighten to the correct torque.

11. Spray a thin amount of a mixture of 50 percent VCI oil and 50 percent engine oil onto the following components: flywheel, ring gear teeth and starter pinion. Install the covers in order to prevent evaporation of the vapors from the VCI oil.

12. Apply a heavy amount of Cat Multipurpose Grease (MPGM) to all outside parts that move, such as rod threads, ball joints, linkage.

Note: Install all covers. Ensure that tape has been installed over all openings, air inlets, exhaust openings, the flywheel housing, the crankcase breathers, the dipstick tubes.

Ensure that all covers are airtight and weatherproof. Use a waterproof weather resistant tape such as Kendall No. 231 or an equivalent. Do not use duct tape. Duct tape will only seal for a short time.

13. Under most conditions, removing the batteries is the best procedure. As an alternative, place the batteries in storage. As needed, periodically charge the batteries while the batteries are in storage.

If the batteries are not removed, wash the tops of the batteries until the tops are clean. Apply an electrical charge to the batteries in order to obtain a specific gravity of 1.225.

Disconnect the battery terminals. Place a plastic cover over the batteries.

Note: For additional information, refer to Special Instruction, SEHS7633, “Battery Test Procedure”.

14. Loosen all belts.

15. Place a waterproof cover over the engine. Ensure that the engine cover is secure. The cover should be loose enough to allow air to circulate around the engine in order to prevent damage from condensation.

16. Attach a tag with the storage date to the engine.

17. Remove the waterproof cover at 2 month or 3 month intervals in order to check the engine for corrosion. If the engine has signs of corrosion, repeat the protection procedure.

Coolant System

Completely fill the cooling system before storage.

Refer to this Operation and Maintenance Manual, “Fluid Recommendations” for more information about coolants.

Removal from Storage

1. Remove all outside protective covers.

2. Change the oil and filters.

3. Check the condition of the fan and alternator belts. Replace the belts, if necessary. Refer to this Operation and Maintenance Manual, “Belts - Inspect/Adjust/Replace” for the correct procedure.

4. Replace the fuel filter elements.

5. Remove the plastic covers from the air cleaner elements.

6. Use a bar or a turning tool in order to turn the engine in the normal direction of rotation. The procedure ensures that no hydraulic locks or resistance exist.

7. Before starting the engine, remove the valve cover or covers. Put a large amount of engine oil on the camshaft, cam followers, and valve mechanism in order to prevent damage to the mechanism.

8. Pressure-lubricate the engine before starting the engine. Pressure lubricating the engine ensures immediate lubrication and prevents damage to the engine during the first few minutes of engine operation. If the engine is not equipped with a prelube pump, contact your Cat dealer for information about lubrication of the engine before starting the engine.

9. Check the condition of all rubber hoses. Replace any worn hoses. Replace any damaged hoses.

10. Before start-up, test the cooling system for a 3 percent to a 6 percent concentration of coolant conditioner. Add liquid coolant conditioner or a coolant conditioner element, if equipped.

Test the coolant mixture for proper nitrite level. If necessary, adjust the coolant mixture.

Prime the engine with clean diesel fuel before starting.

11. Ensure that the cooling system is clean. Ensure that the system is full. Ensure that the system has the correct amount of supplemental cooling system conditioner.

12. On the first day of operation, check the entire engine several times for leaks and correct operation.

13. If the engine was removed from storage in which temperatures of less than -12°C (10°F) were encountered, refer to Service Manual, SEBU5898, “Cold Weather Recommendations Operation and Maintenance”.

Extended Storage (Engine with DEF Tank)

1. Ensure a normal shutdown. Allow Delayed Engine Shutdown, or properly cool the engine prior to shutting down.

2. Ensure a proper DEF purge. Do not disconnect the battery disconnect switch within 2 minutes after key off.

3. Fill the DEF tank with DEF that meets all requirements defined in “ISO 22241-1”.

4. Ensure all DEF lines, and electrical connectors are connected prior to prevent crystal from forming.

5. Ensure that the DEF cap is properly installed.

Removal from Extended Storage (Engine with DEF Tank)

If the DEF tank was stored for a duration equal to or exceeding that listed in table 3 at the corresponding temperature, replace the DEF.

If the DEF quality is in doubt, test with a refractometer. DEF must be within the required range defined in “ISO 22241-1”. For more detailed information about testing DEF quality, contact the local Caterpillar dealer.

Table 3

Temperature	Duration
10° C (50° F)	36 months
25° C (77° F)	18 months
30° C (86° F)	12 months
35° C (95° F)(1)	6 months

(1) At 35° C, significant degradation can occur. Check every batch before use.

1. Drain DEF from the tank, and refill with DEF that meets all requirements defined in “ISO 22241-1”.

2. Replace the DEF filter.

3. Start the engine. If a fault code becomes active, turn off the engine, allow 2 minutes to purge, then restart the engine.

4. If a fault code continues to stay active, Refer to Troubleshooting.

Features and Controls

i05812788

Selective Catalytic Reduction Warning System

SMCS Code: 1091-WXX; 7400

The selective catalytic reduction (SCR) system is a system used to reduce NOx emissions from the engine. Diesel exhaust fluid (DEF) is pumped from the DEF tank and is sprayed into the exhaust stream. The DEF reacts with the SCR catalyst to reduce NOx and leaves a nitrogen and water vapor. The Exhaust Gas Recirculation (EGR) system cools, measures, and introduces recalculated exhaust gas into the intake manifold to aid in NOx reduction.

NOTICE
Stopping the engine immediately after the engine has been working under load can result in overheating of SCR components.

Refer to the Operation and Maintenance Manual, “Engine Stopping” procedure to allow the engine to cool and to prevent excessive temperatures in the turbocharger housing and the DEF injector.

NOTICE
Allow at least 2 minutes after shutting down the engine before you turn the battery disconnect switch to OFF. Disconnecting the battery power too soon will prevent purging of the DEF lines after the engine is shut down.

Definitions

Observe the following definitions.

Self-correct – Fault condition no longer exists. An active fault code will no longer be active.

Notification – Action taken by the system to alert the operator of pending Inducement.

Inducement – Engine derates, vehicle speed limits, or other actions intended to prompt the operator to repair or maintain the emission control system.

Inducement Trigger – Fault conditions that result in activation of the inducement strategy. DEF level inducement faults have a diagnostic fault code. DEF quality fault, SCR tampering fault, SCR system fault, and EGR system faults will all have a related diagnostic fault code along with an inducement diagnostic fault code.

First occurrence – A DEF quality fault, SCR tampering fault, SCR system fault, or an EGR system fault becomes active for the first time.

Repeat occurrence – If any DEF quality fault, SCR tampering fault, SCR system fault, or an EGR system fault becomes active again within 40 hours of the first occurrence.

Safe Harbor Mode (Worldwide) – Safe Harbor Mode is a 20 minute engine run time period that the engine can be operated with full power after reaching a level 3 inducement. Once in level 3 inducement, the operator can perform a key cycle and the engine will enter Safe Harbor Mode. Safe Harbor Mode can only be implemented once. Safe Harbor Mode is not allowed for DEF level inducements with Worldwide configuration.

Safe Harbor Mode (European Union) – Safe Harbor Mode is a 30 minute engine run time period that the engine can be operated with full power after reaching a level 3 inducement. Once in level 3 inducement, the operator can perform a key cycle and the engine will enter Safe Harbor Mode. Safe Harbor Mode can only be implemented up to three times.

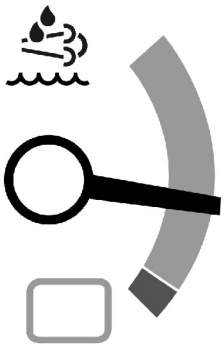

Illustration 29 g03676102
DEF Level Normal

Inducement Strategy for DEF Level (European Union)

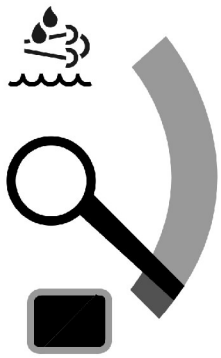

Illustration 30 g03676107

If the DEF level falls below 20%, an amber indicator will illuminate next to the DEF level gauge on the dash. To avoid further inducements, turn the key to the OFF position and add DEF to the DEF tank.

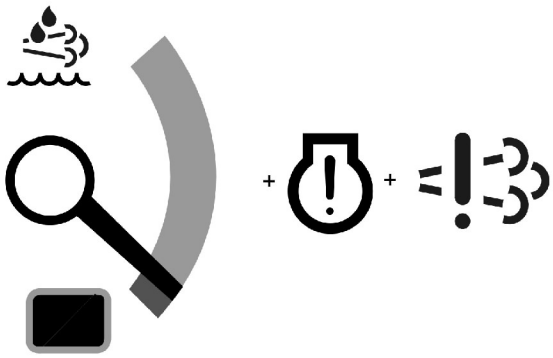

Illustration 31 g03676111

If the DEF level falls below 13.5%, a level 1 inducement event will occur. The check engine lamp and the emissions malfunction indicator lamp will illuminate. The amber indicator next to the DEF level gauge on the dash will continue to remain lit.

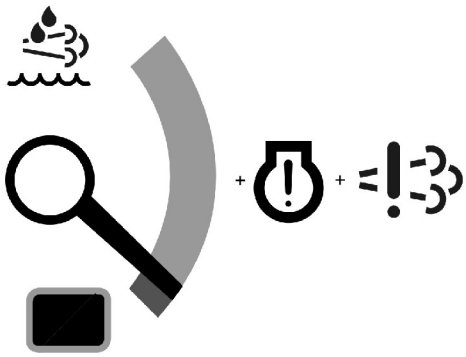

Illustration 32 g03676123

Reduced Performance

When the ECM is configured to "Reduced Performance" and the DEF level is below 1%, the engine will be in level 2 inducement. The check engine lamp and emissions malfunction indicator lamp will illuminate and flash slowly. The DEF level gauge amber lamp will remain lit. The engine will have a 50% derate. When the DEF tank has been emptied of all DEF, the engine will have a 100% derate and be limited to 1000 rpm or low idle, whichever is greater. No further inducement action will occur for "Reduced Performance" configuration. Safe Harbor Mode is allowed for three key cycles.

Reduced Time

When the ECM is configured to “Reduced Time” and the DEF level is below 7.5%, the engine will be in level 2 inducement. The check engine lamp and emissions malfunction indicator lamp will illuminate and flash slowly. The DEF level gauge amber lamp will remain lit.

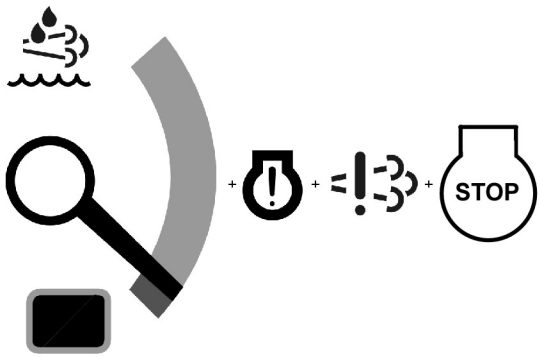

Illustration 33 g03676127

Reduced Time

If the ECM is configured to “Reduced Time” and the DEF level is 0%, the engine will be in level 3 inducement. The check engine lamp and emissions malfunction indicator lamp will illuminate and flash at a fast rate. A red stop lamp will illuminate solid. The DEF level gauge amber lamp will remain lit. The engine will have a 100% derate and be limited to 1000 rpm or low idle, whichever is greater. If the final inducement action in ET is set to “Idle Down” , then the engine will continue to idle at derated condition. If set to “Shutdown” , engine will shut down after 5 minutes. Safe Harbor Mode is allowed for three key cycles. After Safe Harbor Mode is completed, the engine will return to idle or shut down. If in shutdown configuration, the engine may be restarted, but will only run for 5 minutes at derated condition before shutting down again. This action will continue until the issue is resolved.

Note: Turn the key to the OFF position and add DEF to the DEF tank to reset the DEF level inducement.

Inducement Strategy for DEF Quality, Tampering, SCR System Fault, and Impeded EGR (European Union)

Illustration 34 g03677836

Reduced Performance

The check engine and emissions malfunction indicator lamp will illuminate for a fault resulting from poor DEF quality, SCR system tampering, SCR system fault, or an EGR system fault. If the fault is a result of poor DEF quality or SCR system fault, a level 1 inducement will occur for a duration of 10 hours. If the fault is the result of SCR system tampering or EGR system fault, a level 1 inducement will occur for 36 hours.

Reduced Time

The check engine lamp and emissions malfunction indicator lamp will illuminate for a fault resulting from poor DEF quality, SCR system tampering, SCR system fault, or an EGR system fault. If the fault is the result of poor DEF quality or SCR system fault, a level 1 inducement will occur for a duration of 5 hours. If the fault is the result of SCR system tampering or EGR system fault, a level 1 inducement will occur for 18 hours.

Illustration 35 g03676138

Reduced Performance

If a fault condition exists for the entire duration of inducement level 1, the strategy advances to inducement level 2. The check engine lamp and emissions malfunction indicator lamp will flash slowly. For poor DEF quality and SCR system faults the duration for a level 2 inducement is 10 hours for the first occurrence. A repeat occurrence will result in level 2 inducement for 2 hours. For SCR system tampering and EGR system faults the duration for a level 2 inducement is 64 hours for the first occurrence. A repeat occurrence will result in level 2 inducement for 5 hours. The engine will have a 50% derate. If the fault is not corrected before the inducement duration ends, the engine will become 100% derated and be limited to 1000 rpm or low idle, whichever is greater. No further inducements will occur for “Reduced Performance” configuration. Safe Harbor Mode is allowed for 3 key cycles.

Reduced Time

If a fault condition exists for the entire duration of inducement level 1, the strategy advances to inducement level 2. The check engine lamp and emissions malfunction indicator lamp will flash slowly. For poor DEF quality and SCR system faults the duration for a level 2 inducement is 5 hours for the first occurrence. A repeat occurrence will result in level 2 inducement for 1 hour. For SCR system tampering and EGR system faults, the duration for a level 2 inducement is 18 hours for the first occurrence. A repeat occurrence will result in level 2 inducement for 1 hour 48 minutes.

Illustration 36 g03676141

Reduced Time

If configured to “Reduced Time” and a fault condition exists for the entire duration of inducement level 2, the strategy advances to inducement level 3. The check engine lamp and emissions malfunction indicator lamp will flash at a fast rate. A red stop lamp will also illuminate solid. The engine will have a 100% derate and be limited to 1000 rpm or low idle, whichever is greater. If the final inducement action in Cat® ET is set to “Idle Down” then engine will continue to idle at derated condition. If set to “Shutdown” , engine will shut down after 5 minutes. A key cycle will allow safe harbor mode to initiate. Safe harbor is allowed up to three times. After safe harbor, the engine will be in level 3 final inducement. If set to “Shutdown” , the engine may be restarted, but will only run for 5 minutes at derated condition before shutting down again. This action will continue until the issue is resolved.

Note: Contact your Cat dealer for repairs if a fault occurs.

Inducement Strategy for DEF Level (Worldwide)

Illustration 37 g03676164

If the DEF level falls below 20%, an amber indicator will illuminate next to the DEF level gauge on the dash. To avoid inducements, turn the key to the OFF position and add DEF to the DEF tank.

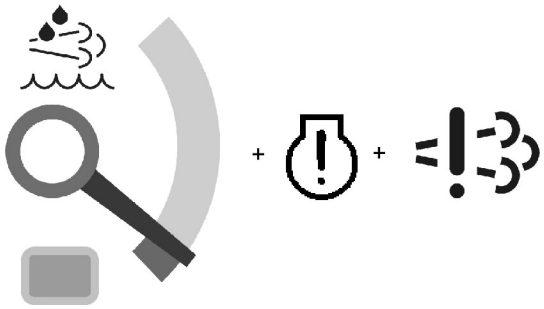

Illustration 38 g03676169

If the DEF level falls below 13.5%, a level 1 inducement event will occur. The check engine lamp and the emissions malfunction indicator lamp will illuminate. The amber indicator next to the DEF level gauge on the dash will continue to remain lit.

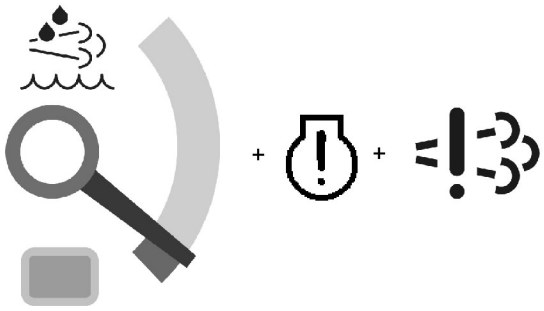

Illustration 39 g03676174

If the DEF level is below 7.5%, a level 2 inducement event will occur. The check engine lamp and the emissions malfunction indicator lamp will illuminate and flash slowly. The amber indicator next to the DEF level gauge on the dash will remain lit. If the ECM is configured to “Reduced Performance” and the DEF level has reached 1%, the machine will be limited to 75% torque.

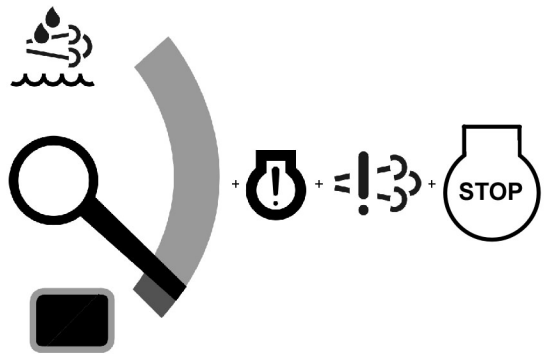

Illustration 40 g03676210

If the ECM is configured to "Reduced Performance" and the DEF tank has been emptied of all DEF, the engine will be in a level 3 final inducement. If the ECM is configured to "Reduced Time" and the DEF level is 3%, the engine will be in a level 3 final inducement. The check engine lamp and the emissions malfunction indicator lamp will flash at a fast rate and a red stop lamp will illuminate solid. The engine will be taken to low idle or will be shut down. Once shut down, the engine can be restarted for 5 minute periods at reduced speed and torque. If set to idle, the engine will idle indefinitely at reduced torque. The amber indicator next to the DEF level gauge on the dash will remain lit.

Note: Turn the key to the OFF position and add DEF to the DEF tank to reset the DEF level inducement.

Inducement Strategy for DEF Quality, Tampering, SCR System Fault, and Impeded EGR (Worldwide)

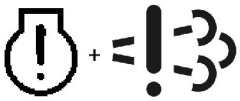

Illustration 41 g03676215

The emissions malfunction indicator lamp will illuminate for a fault resulting from poor DEF quality, SCR system tampering, SCR system fault, or an EGR system fault. If the fault is the result of poor DEF quality, SCR system tampering, or SCR system fault, a first occurrence will result in a level 1 inducement for a duration of 2.5 hours. The level 1 inducement will also illuminate the check engine lamp. Repeat occurrences will result in a level 1 inducement duration of 5 minutes. If the fault is the result of an EGR system fault, a first occurrence will result in a level 1 inducement for a duration of 35 hours. Repeat occurrences will result in a level 1 inducement duration of 48 minutes.

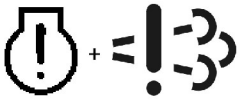

Illustration 42 g03676215

If a fault condition exists for the entire duration of inducement level 1, the strategy advances to inducement level 2. The check engine lamp and the emissions malfunction indicator lamp will illuminate and flash slowly for a fault resulting from poor DEF quality, SCR system tampering, SCR system fault, or an EGR system fault. For poor DEF quality, SCR system tampering, and SCR system faults, the duration for a level 2 inducement is 70 minutes for the first occurrence. For EGR system faults, the duration for a level 2 inducement is 60 minutes for the first occurrence. Repeat occurrences for poor DEF quality, SCR system tampering, and SCR system faults will result in a level 2 inducement of 5 minutes. Repeat occurrences for EGR system faults will result in a level 2 inducement of 60 minutes.

Illustration 43 g03676218

If a fault condition exists for the entire duration of inducement level 2, the strategy advances to inducement level 3. The check engine lamp and the emissions malfunction indicator lamp will flash at a fast rate. A red stop lamp will illuminate solid. The engine will be taken to low idle or will be shut down. After the level 3 inducement you may cycle the key, which will allow 20 minutes of engine run time with full torque. After 20 minutes, the engine will be in level 3 final inducement and will allow idle only or be shut down until the issue has been resolved. Once shut down, the engine can be restarted for 5 minute periods at reduced speed and torque. If set to idle, the engine will idle indefinitely at reduced torque.

Note: Contact your Cat dealer for repairs if a fault occurs.

i05422613

Battery Disconnect Switch
(If Equipped)

SMCS Code: 1411

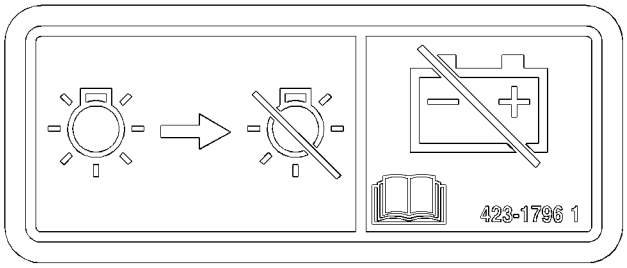

Illustration 44 g03422039

NOTICE
Do not turn off the battery disconnect switch until the indicator lamp has turned off. If the switch is turned off when the indicator lamp is illuminated the Diesel Exhaust Fluid (DEF) system will not purge the DEF. If the DEF does not purge, DEF could freeze and damage the pump and lines.

NOTICE
Never move the battery disconnect switch to the OFF position while the engine is operating. Serious damage to the electrical system could result.

Battery Disconnect Switch – The battery disconnect switch can be used in order to disconnect the battery from the engines electrical system. The key must be inserted into the battery disconnect switch before the battery disconnect switch can be turned.

ON – To activate the electrical system, insert the disconnect switch key and turn the battery disconnect switch clockwise. The battery disconnect switch must be turned to the ON position before you start the engine.

OFF – To deactivate the electrical system, turn the battery disconnect switch counterclockwise to the OFF position.

The battery disconnect switch and the engine start switch perform different functions. The entire electrical system is disabled when you turn the battery disconnect switch to the OFF position. The battery remains connected to the electrical system when you turn the engine start switch to the OFF position.

Turn the battery disconnect switch to the OFF position and remove the key when you service the electrical system or any other engine components.

Turn the battery disconnect switch to the OFF position and remove the disconnect switch key after you operate the engine. This will prevent the battery from being discharged. The following problems can cause battery discharge:

- short circuits
- current draw via some components
- vandalism

i05812500

Monitoring System

SMCS Code: 1900; 7400; 7450; 7451

The monitoring system is designed to alert the operator to an immediate problem with any of the engine systems that are monitored. The Monitoring System is also designed to alert the operator to an impending problem with any of the engine systems that are monitored.

The monitoring system parameters can be accessed via the Cat ET service tool. Many of the parameters within the monitoring system can be tailored to suit the operation of the engine.

An example of adjustments that may be made within the monitoring system is changing the setpoint of the engine overspeed indicator from the factory default setting.

Instrument Panel

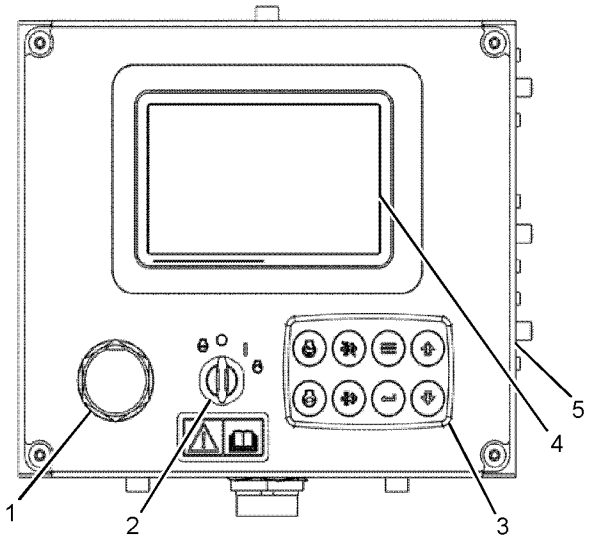

Illustration 45 g03353026

Instrument panel

(1) service tool connector
(2) engine start switch (key)
(3) keypad
(4) message display
(5) circuit protection

Service Tool Connector (1)

For more information about the use of Cat ET and the PC requirements for Cat ET, refer to the documentation that accompanies your Cat ET software.

Engine Start Switch (2)

NOTICE
The engine start switch must be in the ON position and the engine must be running in order to maintain electrical functions and hydraulic functions. This procedure must be followed in order to prevent serious machine damage.

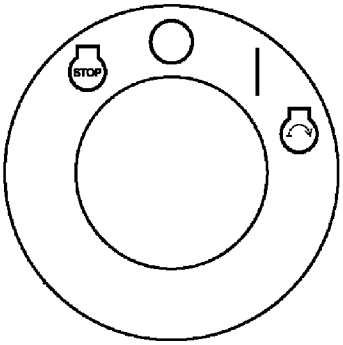

Illustration 46 g02362719

Engine Stop (Shutdown) – Turn the key to this position in order to disable the delayed engine shutdown (DES). The engine will be shut down immediately.

Note: Shutting down the engine using this method is considered a hard shutdown which disables the DES.

Note: A warning message and/or Audible alarm will be initiated. A fault code will be logged for improper engine shutdown if exhaust temperature is above limit.

Note: Overriding delayed engine shutdown may reduce engine and machine system component life.

For more information, refer to this Operation and Maintenance Manual, “Delayed Engine Shutdown (If Equipped)”.

OFF – Insert the engine start switch key only while the start switch is in the OFF position. Remove the engine start switch key only while the engine start switch is in the OFF position. Turn the engine start switch to the OFF position before you attempt to restart the engine. Turn the engine start switch to the OFF position in order to stop the engine.

ON – To activate the electrical circuits in the cab, turn the key clockwise to the ON position.

START – To start the tractor engine, turn the key clockwise to the START position. After the engine starts, release the key. The key will return to the ON position.

Note: If the engine fails to start, return the engine start switch key to the OFF position. Return the key to the start position before you attempt to start the engine again.

Keypad (3)

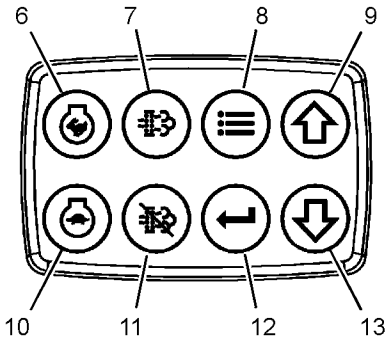

Illustration 47 g03353496

Throttle up (6) – This button is used in order to increase throttle speed.

Force Regeneration (7) – Push and hold the top switch for 2 seconds in order to start a manual regeneration cycle.

Menu(8) – This button is used to change the display screen to other options.

Scroll up (9) – This button is used to navigate through the various screens of the .

Throttle down (10) – This button is used in order to decrease throttle speed.

Disable Regeneration (11) – Push and hold the bottom switch for 2 seconds in order to disable the automatic regeneration cycle.

Enter

Enter (12) – This button selects the currently highlighted menu option. The "Enter" button also acknowledges any Level 1, Level 2, or Level 3 diagnostic message on the display screen.

Scroll down (13) – This button is used to navigate through the various screens of the .

Message Display (4)

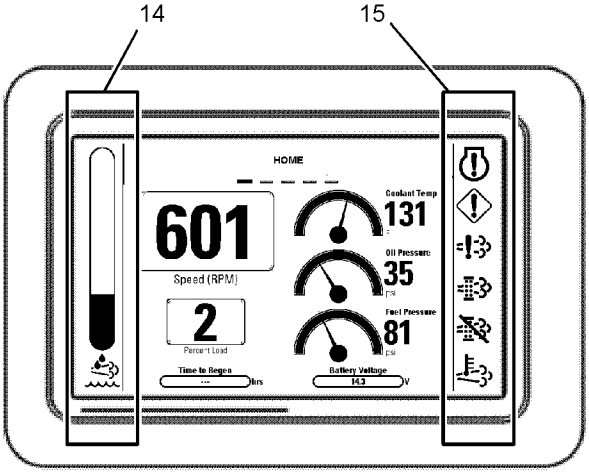

Illustration 48 g03353673

Message display screen in "Default" menu

(14) DEF Level
(15) Indicator Bar

The message display provides for a means to view various types of engine information. The information that can be viewed is described by menu below.

Use the scroll up (9) and scroll down (13) buttons to navigate through the following menus on the message display.

The DEF level gauge (14), and the Indicator bar (15) are on the sides of each of the menu screens.

DEF Level (14) – This gauge is located on the left side of each menu screen, and indicates the level of DEF remaining in the DEF tank.

Indicator Bar (15) – This area is located on the right side of each menu screen. An indicator will illuminate when the monitoring system senses any of the following statuses:

Check Engine – This indicator illuminates when there is a fault with the engine or after treatment system.

Alert Indicator – This indicator illuminates when a Level 2 or Level 3 warning fault has been detected by the monitoring system.

Diesel Particulate Filter (DPF) – This indicator will illuminate in order to show that a regeneration is needed.

Regeneration Active – This indicator will illuminate in order to show that the Caterpillar Regeneration System (CRS) is active.

Regeneration Disabled – This indicator will illuminate in order to show that a regeneration has been disabled.

Emission Malfunction Indicator – This indicator will illuminate when an emissions system has failed. Refer to Operation and Maintenance Manual, "Selective Catalytic Reduction Warning System" for more information.

Default (Home) Menu

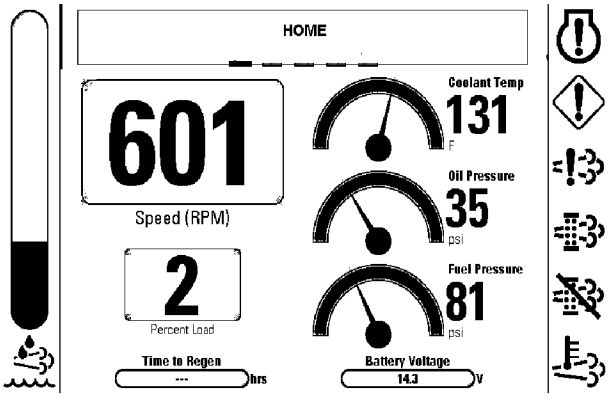

Illustration 49 g03353195

The following options are displayed in the "Default" menu:

"Speed (RPM)" – This gauge indicates engine speed (rpm). When the throttle control lever is moved to the full throttle position without load, the engine is running at high idle. The engine is running at the full load rpm when the throttle control lever is at the full throttle position with maximum rated load.

"Percent Load" – This gauge indicates the percentage of full load rpm at which the engine is operating.

"Time to Regen" – When you scroll to this option, the display will show the time remaining until the next regen is required to run. A forced DPF regeneration will not be allowed until this timer is less than 8 hours.

Note: Some applications will configure this option to display the time remaining only when regens are disabled. In that case, the display will read "AUTO" as long as automatic regens are enabled. When regens are disabled, the time until the next regen is required will be displayed.

"Coolant Temp" – This gauge indicates the current temperature of the engine coolant.

"Oil Pressure" – This gauge indicates the current engine oil pressure.

"Fuel Pressure" – This gauge indicates fuel pressure to the fuel injection pump from the fuel filter. A decrease in fuel pressure usually indicates a dirty fuel filter or a plugged fuel filter. As the fuel filter becomes plugged, there will be a noticeable reduction in the performance of the engine.

"Battery Voltage" – This gauge indicates the voltage of the electrical system.

Performance Menu

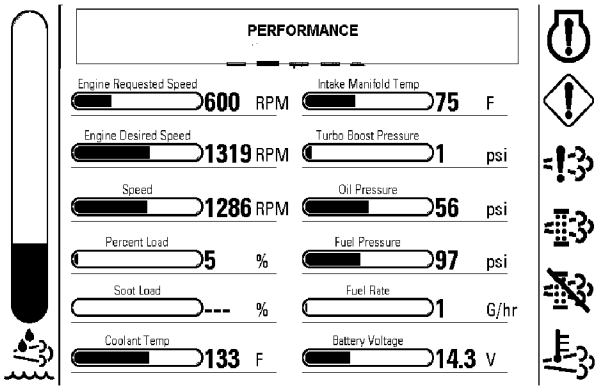

Illustration 50 g03353207

The following options are displayed in the "PERFORMANCE" menu:

"Engine Requested Speed" – The display will show the requested speed of the engine.

"Engine Desired Speed" – The display will show the desired speed of the engine.

"Speed" – This gauge indicates engine speed (rpm). When the throttle control lever is moved to the full throttle position without load, the engine is running at high idle. The engine is running at the full load rpm when the throttle control lever is at the full throttle position with maximum rated load.

"Percent Load" – This gauge indicates the percentage of full load rpm at which the engine is operating.

"Coolant Temp" – This gauge indicates the current temperature of the engine coolant.

"Intake Manifold Temp" – The display will show the temperature at the manifold.

"Turbo Boost Pressure" – The display will show the pressure at the intake manifold.

"Oil Pressure" – The display will show the engine oil pressure for engine.

"Fuel Pressure" – The display will show the fuel pressure for the engine.

"Fuel Rate" – This gauge shows average fuel consumption in G/hr.

"Battery Voltage" – This gauge indicates the voltage of the electrical system.

Totals & Configuration Menu

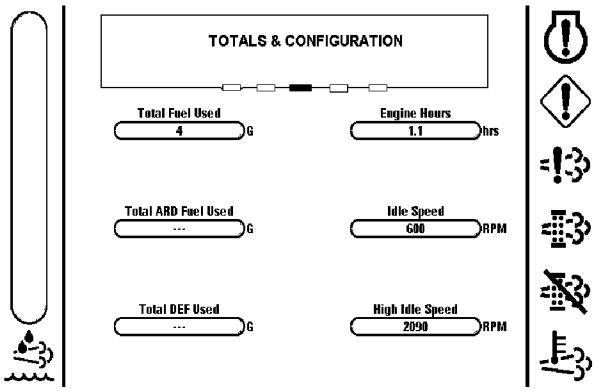

Illustration 51 g03353210

The following options are displayed in the "Totals" menu:

"Total Fuel Used" – The display shows the total amount of fuel that has been consumed by the machine.

"Total ARD Fuel Used" – The display will show the amount (in gallons) of fuel burned through the regeneration system over the life of the engine.

"Total DEF Used" – The display shows the total amount of diesel exhaust fluid that has been consumed by the system.

"Engine Hours" – The display will show the total number of hours the engine has been operating.

"Idle Speed" – The display will show the low idle speed setting on the engine.

"High Idle Speed" – The display will show the high idle speed setting on the engine.

Settings Menu

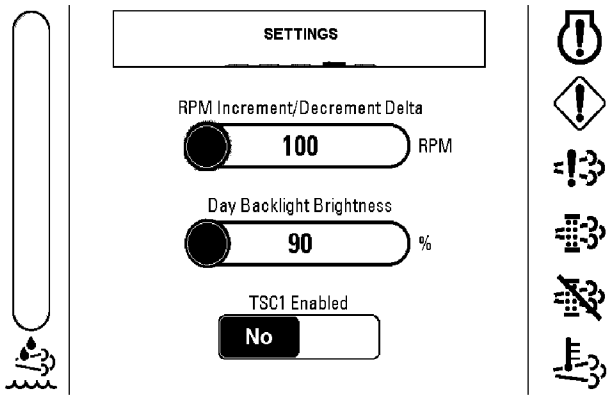

Illustration 52 g03353409

The following options are available in the "Settings" menu:

"Day Backlight Brightness" – Select this option in order to adjust the brightness of the following items: Message digital display area, switch lights and instrument panel lights. This will improve the visibility of the information.

"TSC1 Enabled" – This will allow an external throttle over the "J1939" data link to control engine speed. When the "TSC1" is in the NO position, only the control panel throttle will be allowed to change engine speed.

Diagnostics Menu

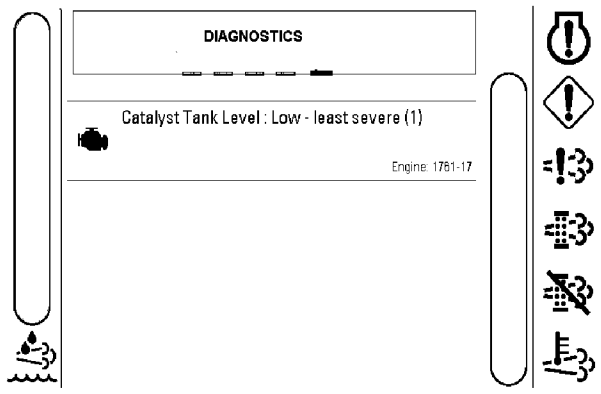

Illustration 53 g03353212

Scroll to the "Diagnostics" menu to view any fault codes that may be present.

Circuit Protection (5)

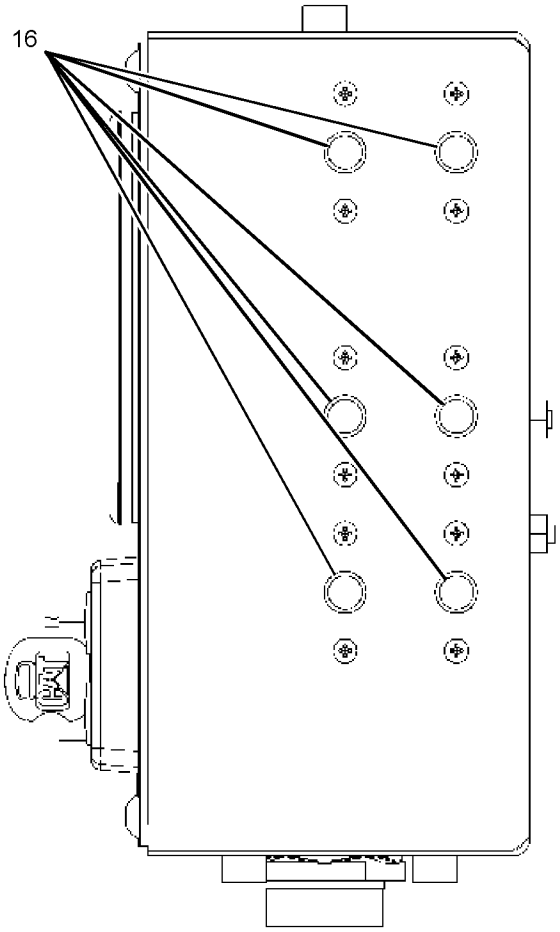

Illustration 54 g03353799

Side view of the instrument panel

(14) circuit breakers

Circuit Breaker (14) – Press the button in order to reset the circuit breaker if a circuit breaker trips. If the electrical system is working properly, the button will remain pressed. If the button does not remain pressed or if the circuit breaker trips soon after being reset, check the appropriate electrical circuit. Repair the electrical circuit, if necessary.

Engine Diagnostics

i01563934

Self-Diagnostics

SMCS Code: 1000; 1900; 1901; 1902

Caterpillar Electronic Engines have the capability to perform a self-diagnostics test. When the system detects an active problem, the "DIAGNOSTIC" lamp is activated. Diagnostic codes will be stored in permanent memory in the Electronic Control Module (ECM). The diagnostic codes can be retrieved by using the following components:

- Caterpillar electronic service tools
- "DIAGNOSTIC" lamp

Note: The "DIAGNOSTIC" lamp must be installed by the OEM or by the customer.

Some installations have electronic displays that provide direct readouts of the engine diagnostic codes. Refer to the manual that is provided by the OEM for more information on retrieving engine diagnostic codes.

Active codes represent problems that currently exist. These problems should be investigated first. If a code is active, the "DIAGNOSTIC" lamp will flash the flash code at five second intervals.

Logged codes represent the following items:

- Intermittent problems
- Recorded events
- Performance history

The problems may have been repaired since the logging of the code. These codes do not indicate that a repair is needed. The codes are guides or signals when a situation exists. Codes may be helpful to troubleshoot problems.

When the problems have been corrected, the corresponding logged fault codes should be cleared.

i03840813

Fault Logging

SMCS Code: 1000; 1900; 1901; 1902

The system provides the capability of Fault Logging. When the Electronic Control Module (ECM) generates an active diagnostic code, the code will be logged in the memory of the ECM. The codes that have been logged in the memory of the ECM can be retrieved with Caterpillar electronic service tools. The codes that have been logged can be cleared with Caterpillar electronic service tools. The codes that have been logged in the memory of the ECM will be automatically cleared from the memory after 100 hours. The following faults cannot be cleared from the memory of the ECM without using a factory password: overspeed, low engine oil pressure and high engine coolant temperature.

Engine Starting

i02109067

Before Starting Engine

SMCS Code: 1000; 1400; 1450

Perform the required daily maintenance and other periodic maintenance before the engine is started. Inspect the engine compartment. This inspection can help prevent major repairs at a later date. Refer to the Operation and Maintenance Manual, “Maintenance Interval Schedule” for more information.

- For the maximum service life of the engine, make a thorough inspection before the engine is started. Look for the following items: oil leaks, coolant leaks, loose bolts and trash buildup. Remove trash buildup and arrange for repairs, as needed.
- Inspect the aftercooler for loose connections and for debris buildup.
- Inspect the cooling system hoses for cracks and for loose clamps.
- Inspect the alternator and accessory drive belts for cracks, breaks, and other damage.
- Inspect the wiring for loose connections and for worn wires or frayed wires.
- Check the fuel supply. Drain water from the water separator (if equipped). Open the fuel supply valve.

NOTICE

All valves in the fuel return line must be open before and during engine operation to help prevent high fuel pressure. High fuel pressure may cause filter housing failure or other damage.

If the engine has not been started for several weeks, fuel may have drained from the fuel system. Air may have entered the filter housing. Also, when fuel filters have been changed, some air pockets will be trapped in the engine. In these instances, prime the fuel system. Refer to the Operation and Maintenance Manual, “Fuel System - Prime” for more information on priming the fuel system.

WARNING

Engine exhaust contains products of combustion which may be harmful to your health. Always start and operate the engine in a well ventilated area and, if in an enclosed area, vent the exhaust to the outside.

- Do not start the engine or move any of the controls if there is a “DO NOT OPERATE” warning tag or similar warning tag attached to the start switch or to the controls.
- Ensure that the areas around the rotating parts are clear.
- All of the guards must be put in place. Check for damaged guards or for missing guards. Repair any damaged guards. Replace damaged guards and/or missing guards.
- Disconnect any battery chargers that are not protected against the high current drain that is created when the electric starting motor (if equipped) is engaged. Check electrical cables and check the battery for poor connections and for corrosion.
- Reset all of the shutoffs or alarm components.
- Check the engine lubrication oil level. Maintain the oil level between the “ADD” mark and the “FULL” mark on the oil level gauge.
- Check the coolant level. Observe the coolant level in the coolant recovery tank (if equipped). Maintain the coolant level to the “FULL” mark on the coolant recovery tank.
- If the engine is not equipped with a coolant recovery tank maintain the coolant level within 13 mm (0.5 inch) of the bottom of the filler pipe. If the engine is equipped with a sight glass, maintain the coolant level in the sight glass.
- Observe the air cleaner service indicator (if equipped). Service the air cleaner when the yellow diaphragm enters the red zone, or when the red piston locks in the visible position.
- Ensure that any driven equipment has been disengaged. Minimize electrical loads or remove any electrical loads.

i04132731

Cold Weather Starting

SMCS Code: 1000; 1250; 1450; 1453; 1456; 1900

Startability will be improved at temperatures below 10°C (50°F) from the use of a cylinder block coolant heater or from other means that are used to heat the crankcase oil. Some engine applications use a jacket water heater to improve startability. Use of a jacket water heater will help reduce white smoke and misfire during start-up in cold weather.

Note: If the engine has not been run for several weeks, fuel may have drained. Air may have moved into the filter housing. Also, when fuel filters have been changed, some air will be left in the filter housing. Refer to the Operation and Maintenance Manual, “Fuel System - Prime” (Maintenance Section) for more information on priming the fuel system.

Ether Injection System (If Equipped)

The ether injection system is controlled by the ECM. The ECM monitors the coolant temperature, intake air temperature, ambient air temperature, and barometric pressure to determine when ether injection is needed. At sea level, ether will be used if any of the temperatures fails to exceed 0° C (32° F). This temperature is subject to an increase as barometric pressure increases.

WARNING

Personal injury or property damage can result from alcohol or starting fluids.

Alcohol or starting fluids are highly flammable and toxic and if improperly stored could result in injury or property damage.

Follow the procedure in this Operation and Maintenance Manual, “Starting the Engine”.

i04032033

Starting the Engine

SMCS Code: 1000; 1450

WARNING

Engine exhaust contains products of combustion which may be harmful to your health. Always start and operate the engine in a well ventilated area and, if in an enclosed area, vent the exhaust to the outside.

Starting the Engine

Refer to the Owner's Manual of the OEM for your type of controls. Use the following procedure to start the engine.

1. Place the transmission in NEUTRAL. Disengage the flywheel clutch in order to allow the engine to start faster, and to reduce the draining of the battery.

2. Turn the ignition switch to the ON position.

   During the key on, the diagnostic lamp, warning lamp, regeneration lamps, and DPF disabled lamp will be checked for proper bulb operation. If any of the lamps do not illuminate, replace the bulb.

NOTICE

Do not engage the starting motor when flywheel is turning. Do not start the engine under load.

If the engine fails to start within 30 seconds, release the starter switch or button and wait two minutes to allow the starting motor to cool before attempting to start the engine again.

3. Push the start button or turn the ignition switch to the START position in order to crank the engine.

   Do not push down or hold the throttle down while the engine is cranked. The system will automatically provide the correct amount of fuel that is needed to start the engine.

4. If the engine fails to start within 30 seconds, release the start button, or the ignition switch. Wait for 2 minutes in order to allow the starting motor to cool before attempting to start the engine again.

NOTICE

Oil pressure should rise within 15 seconds after the engine starts. Do not increase engine rpm until the oil pressure gauge indicates normal. If oil pressure is not indicated on the gauge within 15 seconds, DO NOT operate the engine. STOP the engine, investigate and correct the cause.

5. Allow the engine to idle for approximately 3 minutes. Idle the engine until the water temperature gauge has begun to rise. Check all gauges during the warm-up period.

Note: Oil pressures and fuel pressures should be in the normal range on the instrument panel. Engines that are equipped with “WARNING” lamps do not have an operating range. The “WARNING and DIAGNOSTIC” lamp (if equipped) will flash while the engine is cranking. The lamp should turn off after proper engine oil pressure or fuel pressure is achieved. Do not apply a load to the engine or increase engine rpm until the oil pressure gauge indicates at least normal pressure. Inspect the engine for leaks and/or unusual noises.

If the engine is operated with a low load, the engine will reach normal operating temperature sooner than idling the engine with no load. When the engine is idled in cold weather, increase the engine rpm to approximately 1000 to 1200 rpm in order to warm up the engine more quickly. Do not exceed the recommended rpm in order to increase the speed of the warm-up. Limit unnecessary idle time to 10 minutes.

Starting Problems

An occasional starting problem may be caused by one of the following items:

- Low battery charge
- Lack of fuel
- Problem with the wiring harness

If the engine fuel system has been run dry, fill the fuel tank and prime the fuel system. Refer to the Operation and Maintenance Manual, “Fuel System - Prime” topic (Maintenance Section).

If the other problems are suspected, perform the appropriate procedure in order to start the engine.

Problems with the Wiring Harness

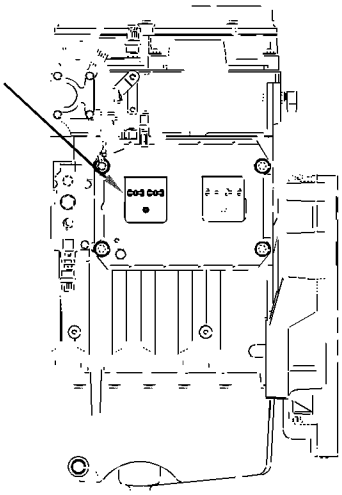

Illustration 55 g01248812
ECM Connector J2/P2

Locate the ECM. Check the connector in order to ensure that the connector is secure. Lightly pull each of the wires in the chassis harness.

1. Pull each wire with approximately 4.5 kg (10 lb) of force. The wire should remain in the connector.
2. If a wire is loose, push the wire back into the connector. Pull the wire again in order to ensure that the wire is secure.
3. Start the engine. If the engine does not start, consult the nearest Caterpillar dealer for assistance.

i04292191

Starting with Jump Start Cables
(Do Not Use This Procedure in Hazardous Locations that have Explosive Atmospheres)

SMCS Code: 1000; 1401; 1402; 1900

WARNING

The connection of battery cables to a battery and the disconnection of battery cables from a battery may cause an explosion which may result in injury or death. The connection and the disconnection of other electrical equipment may also cause an explosion which may result in injury or death. The procedures for the connection and the disconnection of battery cables and other electrical equipment should only be performed in a nonexplosive atmosphere.

WARNING

Improper jump start cable connections can cause an explosion resulting in personal injury.

Prevent sparks near the batteries. Sparks could cause vapors to explode. Do not allow jump start cable ends to contact each other or the engine.

If the installation is not equipped with a backup battery system, starting the engine from an external electrical source may be necessary.

First, determine the reason that starting the engine from an external electrical source is necessary. Refer to Troubleshooting, KENR6849, “C13, C15, and C18 Industrial Engines”.

Many batteries which are considered unusable are still rechargeable. After jump starting, the alternator may not be able to recharge batteries that are severely discharged. The batteries must be charged to the proper voltage with a battery charger. For information on testing and charging, refer to the Special Instruction, SEHS7633, “Battery Test Procedure”.

NOTICE

Using a battery source with the same voltage as the electric starting motor. Use ONLY equal voltage for jump starting. The use of higher voltage will damage the electrical system.

Do not reverse the battery cables. The alternator can be damaged. Attach ground cable last and remove first.

When using an external electrical source to start the engine, turn the generator set control switch to the "OFF" position. Turn all electrical accessories OFF before attaching the jump start cables.

Ensure that the main power switch is in the OFF position before attaching the jump start cables to the engine being started.

1. Turn the start switch on the stalled engine to OFF. Turn off all accessories.

2. Connect one positive end of the jump-start cable to the positive cable terminal of the discharged battery. Connect the other positive end of the jump-start cable to the positive cable terminal of the electrical source.

3. Connect one negative end of the jump-start cable to the negative cable terminal of the electrical source. Connect the other negative end of the jump-start cable to the engine block or to the chassis ground. This procedure helps to prevent potential sparks from igniting combustible gases that are produced by some batteries.

4. Charge the batteries. The engine will not continue to run after starting if the batteries have not been charged.

5. Start the engine.

6. Immediately after the stalled engine is started, disconnect the jump-start cables in reverse order.

Refer to the Electrical Schematic for your engine. Consult your Caterpillar dealer for more information.

i05359363

After Starting Engine

SMCS Code: 1000

Note: In temperatures from 0 to 60°C (32 to 140°F), the warm-up time is approximately 3 minutes. In temperatures below 0°C (32°F), additional warm-up time may be required.

When the engine is idling during warm-up, observe the following conditions:

- Check for fluid or air leaks at idle rpm and at one-half full rpm (no load on the engine) before operating the engine under load. Operating the engine at idle and at one-half full rpm with no load is not possible in some applications.
- Operate the engine at low idle until all systems achieve operating temperatures. Check all gauges during the warm-up period.

Note: Gauge readings should be observed and the data should be recorded frequently while the engine is operating. Comparing the data over time will help to determine normal readings for each gauge. Comparing data over time will also help detect abnormal operating developments. Significant changes in the readings should be investigated.

Extended Idle at Cold Ambient Temperature

The engine may automatically change speeds when the engine is idling in cold ambient temperatures (typically less than 0° C (32° F) for extended periods. The purpose of the automatic speed change is threefold: to maintain the desired operation of the NOx reduction system, to maintain the desired operation of the regeneration system and to keep the engine coolant warm. The engine speed may rise to 1600 rpm for as long as 20 minutes.

The high exhaust system temperature lamp may illuminate during extended idling conditions. This illumination signals that a diesel particulate filter (DPF) regeneration is in progress. Regenerations during cold ambient extended idling may only last up to 10 minutes.

Engine Operation

i00718869

Engine Operation

SMCS Code: 1000

Proper operation and maintenance are key factors in obtaining the maximum life and economy of the engine. If the directions in the Operation and Maintenance Manual are followed, costs can be minimized and engine service life can be maximized.

The time that is needed for the engine to reach normal operating temperature can be less than the time needed for a walk-around inspection of the engine.

After the engine is started and after the engine reaches normal operating temperature, the engine can be operated at the rated rpm. The engine will reach normal operating temperature faster when the engine is at rated speed. The engine will reach normal operating temperature faster when the engine is at low power demand. This procedure is more effective than idling the engine at no load. The engine should reach operating temperature in a few minutes.

Gauge readings should be observed and the data should be recorded frequently while the engine is operating. Comparing the data over time will help to determine normal readings for each gauge. Comparing data over time will also help detect abnormal operating developments. Significant changes in the readings should be investigated.

i05813053

Diesel Particulate Filter Regeneration

SMCS Code: 108F

Regeneration

Regeneration is to increase the exhaust temperature for a given time. The Caterpillar Regeneration System (CRS) is used to remove soot from the DPF, and warm up the Selective Catalyst Reduction (SCR) system. The DPF traps both soot and ash. The ash is removed through a manual cleaning process. Refer to Operation and Maintenance Manual, “Diesel Particulate Filter - Clean” for more information on the service of the DPF.

Regeneration Indicators

Regeneration Active – When illuminated, this indicator shows that the system is active. This indicator shows that elevated emission temperatures are possible. This indicator will turn off when regeneration is complete.

DPF – This indicator will illuminate in order to show that a regeneration is required. This indicator will illuminate when “Time to Regen” is less than a pre-determined amount of time.

Regeneration Disabled – This indicator will illuminate in order to show that a regeneration has been disabled.

Regeneration Switch

Force Regeneration – Press in the top switch for 2 seconds in order to begin regeneration.

Disable Regeneration – Press in the bottom switch for 2 seconds in order to disable regeneration.

Note: If equipped with a rocker style switch, the MIDDLE position of the regeneration switch is the default position for automatic regeneration.

Note: If the engine start switch key is cycled or the “Force Regeneration” switch is pressed for longer than 2 seconds the system will no longer be disabled. When the “Force Regeneration” switch is pressed and “Time to Regen” is less than 8 hours, regeneration will begin if the machine is at low idle and is parked.

Note: If the engine start switch key is cycled while the regeneration system is disabled via the “Disable Regeneration” switch, press and hold the “Disable Regeneration” switch for 2 seconds to reinitiate.

Modes of Regeneration

Automatic: The Electronic Control Module (ECM) uses multiple inputs from the engine and the machine to determine the best time to perform an automatic regeneration. Automatic regenerations can take place throughout the operating cycle of the engine. The regeneration active indicator will be illuminated when a regeneration is being performed. Interruptions of the regeneration are acceptable. If a regeneration is in progress and needs to be stopped, it is permissible to press the “Disable Regeneration” switch.

Note: Automatic adjustments of engine speed may be noticed during regenerations. If a regeneration is taking place and the engine is taken to low idle, the engine speed may remain elevated in order to maintain the regeneration.

Note: If the machine returns to work while an automatic regeneration is active, the regeneration may be stopped. The ECM will continue to monitor inputs to determine the best time to restart the regeneration.

Manual: A manual regeneration is initiated by pressing the "Force Regeneration" switch. A manual regeneration will only be allowed if the "Time to Regen" is less than 8 hours. If the "Force Regeneration" switch is pressed before "Time to Regen" is less than 8 hours, then "Regen not Required" will be displayed. The machine must be stationary, the parking brake must be applied, and the engine must be at low idle in order to perform a manual regeneration.

Disabled: When the regeneration system is in disabled mode, automatic regenerations will not be performed. The DPF indicator will illuminate if a manual regeneration is required. The "Time to Regen" displayed on the performance screen will indicate the time until the next regeneration will be required. However, the DPF indicator may illuminate with time remaining on the display. When the DPF indicator illuminates, the operator must perform a manual regeneration.

Regeneration Triggers

A regeneration may be required for the following reasons:

Soot: The DPF will collect soot produced by the engine. An automatic regeneration will become active to reduce soot level.

Start-Up Regeneration: A start-up regeneration is initiated by the ECM after a cold engine start. This regeneration is performed to heat the system to a required temperature for Diesel Exhaust Fluid (DEF) dosing to begin.

SCR Maintenance: A regeneration is performed to maintain the SCR system.

ARD Maintenance: A regeneration is performed to maintain the CRS system.

Regeneration System Warning Indicators

Illustration 56 g02117258

The DPF Indicator will illuminate solid when a regeneration is required. A regeneration should be performed as soon as possible.

Note: In some situations, the DPF indicator may stay illuminated after a regeneration ends. The illuminated DPF indicator indicates that a complete regeneration has **not** been performed. A complete regeneration is when the soot has been depleted or all of the criteria for one of the other regeneration types have been met. If the DPF indicator stays illuminated, perform a regeneration without interruption. The DPF indicator will shut off when a regeneration is complete.

If the soot load is above a threshold or "Time to Regen" is 0 hours, then a regeneration is required. The DPF indicator will illuminate and flash slowly. Engine power will be slightly derated. If the machine continues to operate without a regeneration, derate will eventually reach 100%. Stop the machine and apply the parking brake. With the engine at low idle, initiate a manual regeneration.

Illustration 57 g03679876

Once the amount of soot collected in the DPF has reached a threshold or "Time to Regen" has been at 0 hours for a pre-determined time, the DPF indicator will illuminate and flash at a fast rate. A red stop lamp will illuminate solid.

10 minutes after the illumination of the DPF indicator and red stop lamp the engine will shut down. The engine can be restarted by cycling the engine start switch key. The engine will return to the previous derate state before shutdown.

Once the amount of soot collected reaches a threshold level or 6.4 hours of run time has passed since the red stop lamp was illuminated without a successful regeneration, the engine will have a 100% derate.

Once the amount of soot collected reaches a critical threshold level, the regeneration will be locked out. At this time, a regeneration can only be done through Cat Electronic Technician (ET) , by an authorized Cat dealer. The engine may be restarted, but will only run for 3 minutes before shutting down again.

i04038637

Engaging the Driven Equipment

SMCS Code: 1000

1. Operate the engine at one-half of the rated rpm, when possible.

2. Engage the driven equipment without a load on the equipment, when possible.

Interrupted starts put excessive stress on the drive train. Interrupted starts also waste fuel. To get the driven equipment in motion, engage the clutch smoothly with no load on the equipment. This method should produce a start that is smooth and easy. The engine rpm should not increase and the clutch should not slip.

3. Ensure that the ranges of the gauges are normal when the engine is operating at one-half of the rated rpm. Ensure that all gauges operate properly.

4. Increase the engine rpm to the rated rpm. Always increase the engine rpm to the rated rpm before the load is applied.

5. Apply the load. Begin operating the engine at low load. Check the gauges and equipment for proper operation. After normal oil pressure is reached and the temperature gauge begins to move, the engine may be operated at full load. Check the gauges and equipment frequently when the engine is operated under load.

Extended operation at low idle or at reduced load may cause increased oil consumption and carbon buildup in the cylinders. This carbon buildup results in a loss of power and/or poor performance.

i01136207

Fuel Conservation Practices

SMCS Code: 1000; 1250

The efficiency of the engine can affect the fuel economy. Caterpillar's design and technology in manufacturing provides maximum fuel efficiency in all applications. Follow the recommended procedures in order to attain optimum performance for the life of the engine.

- Avoid spilling fuel.

Fuel expands when the fuel is warmed up. The fuel may overflow from the fuel tank. Inspect fuel lines for leaks. Repair the fuel lines, as needed.

- Be aware of the properties of the different fuels. Use only the recommended fuels.
- Avoid unnecessary idling.

Shut off the engine rather than idle for long periods of time.

- Observe the service indicator frequently. Keep the air cleaner elements clean.
- Ensure that the turbochargers are operating correctly so that the proper air/fuel ratio is maintained. Clean exhaust indicates proper functioning.
- Maintain a good electrical system.

One faulty battery cell will overwork the alternator. This will consume excess power and excess fuel.

- Ensure that the belts are properly adjusted. The belts should be in good condition.
- Ensure that all of the connections of the hoses are tight. The connections should not leak.
- Ensure that the driven equipment is in good working order.
- Cold engines consume excess fuel. Utilize heat from the jacket water system and the exhaust system, when possible. Keep cooling system components clean and keep cooling system components in good repair. Never operate the engine without water temperature regulators. All of these items will help maintain operating temperatures.

Cold Weather Operation

i03729720

Radiator Restrictions

SMCS Code: 1353; 1396

Caterpillar discourages the use of airflow restriction devices that are mounted in front of radiators. Airflow restriction can cause the following conditions:

- High exhaust temperatures
- Power loss
- Excessive fan usage
- Reduction in fuel economy

If an airflow restriction device must be used, the device should have a permanent opening directly in line with the fan hub. The device must have a minimum opening dimension of at least 770 cm^2 (120 in^2).

A centered opening that is directly in line with the fan hub is specified in order to prevent an interrupted airflow on the fan blades. Interrupted airflow on the fan blades could cause a fan failure.

Caterpillar recommends a warning device for the inlet manifold temperature and/or the installation of an inlet air temperature gauge. The warning device for the inlet manifold temperature should be set at 90° C (194° F). The inlet manifold air temperature should not exceed 75 °C (167 °F). Temperatures that exceed this limit can cause power loss and potential engine damage.

i05264084

Fuel and the Effect from Cold Weather

SMCS Code: 1000; 1250; 1280

The following fuels are the grades that are available for Cat engines:

- No. 1
- No. 2
- Blend of No. 1 and No. 2

No. 2 diesel fuel is the most commonly used fuel. Either No. 1 diesel fuel or a blend of No. 1 and No. 2 is best suited for cold-weather operation.

Quantities of No. 1 diesel fuel are limited. No. 1 diesel fuels are usually available during the months of the winter in the colder climates. During cold-weather operation, if No. 1 diesel fuel is not available, use No. 2 diesel fuel, if necessary.

There are three major differences between No. 1 and No. 2 diesel fuel. No. 1 diesel fuel has the following properties:

- Lower cloud point
- Lower pour point
- Lower rating of kJ (BTU) per unit volume of fuel

When No. 1 diesel fuel is used, a decrease in power and in fuel efficiency may be noticed. Other operating effects should not be experienced.

The cloud point is the temperature when a cloud of wax crystals begins to form in the fuel. These crystals can cause the fuel filters to plug. The pour point is the temperature when diesel fuel will thicken. The diesel fuel becomes more resistant to flow through fuel pumps and through fuel lines.

Be aware of these values when diesel fuel is purchased. Anticipate the average ambient temperature of the area. Engines that are fueled in one climate may not operate well if the engines are moved to another climate. Problems can result due to changes in temperature.

Before troubleshooting for low power or for poor performance in the winter, check the type of fuel that is being used.

When No. 2 diesel fuel is used the following components provide a means of minimizing problems in cold weather:

- Starting aids
- Engine oil pan heaters
- Engine coolant heaters
- Fuel heaters
- Fuel line insulation

For more information on cold-weather operation, see Special Publication, SEBU5898, “Cold Weather Recommendations”.

i03728501

Fuel Related Components in Cold Weather

SMCS Code: 1000; 1250; 1280

Fuel Tanks

Condensation can form in partially filled fuel tanks. Top off the fuel tanks after operating the engine.

Fuel tanks should contain some provision for draining water and sediment from the bottom of the tanks. Some fuel tanks use supply pipes that allow water and sediment to settle below the end of the fuel supply pipe.

Some fuel tanks use supply lines that take fuel directly from the bottom of the tank. If the engine is equipped with this system, regular maintenance of the fuel system filter is important.

Drain the water and sediment from any fuel storage tank at the following intervals:

- Weekly
- Oil changes
- Refueling of the fuel tank

This will help prevent water and/or sediment from being pumped from the fuel storage tank and into the engine fuel tank.

Fuel Heaters

Fuel heaters help to prevent fuel filters from plugging in cold weather due to waxing. A fuel heater should be installed in order for the fuel to be heated before the fuel enters the primary fuel filter.

Select a fuel heater that is mechanically simple, yet adequate for the application. The fuel heater should also help to prevent overheating of the fuel. High fuel temperatures reduce engine performance and the availability of engine power. Choose a fuel heater with a large heating surface. The fuel heater should be practical in size. Small heaters can be too hot due to the limited surface area.

Disconnect the fuel heater in warm weather.

Note: Fuel heaters that are controlled by the water temperature regulator or self-regulating fuel heaters should be used with this engine. Fuel heaters that are not controlled by the water temperature regulator can heat the fuel in excess of 65° C (149° F). A loss of engine power can occur if the fuel supply temperature exceeds 37° C (100° F).

Note: Heat exchanger type fuel heaters should have a bypass provision in order to prevent overheating of the fuel in warm weather operation.

For further information on fuel heaters, consult your Caterpillar dealer.

Engine Stopping

i05798719

Stopping the Engine

SMCS Code: 1000

NOTICE

Stopping the engine immediately after it has been working under load, can result in overheating and accelerated wear of the engine components.

See the following stopping procedure, to allow the engine to cool, and to prevent excessive temperatures in the turbocharger center housing, which could cause oil coking problems.

1. While the machine is stopped, run the engine for 5 minutes at low idle. Idling the engine allows hot areas of the engine to cool gradually.

Note: If the "Regen Active" indicator is illuminated, do not shut off the engine. Refer to Operation and Maintenance Manual, "Monitoring System" for more information on indicators. (if equipped)

2. Turn the engine start switch to the OFF position and remove the key.

Note: The engine may delay before completely shutting down. Delayed engine shutdowns aid in cooling the engine and after-treatment (if equipped) components.

Delayed Engine Shutdown (If Enabled)

The Delayed Engine Shutdown allows the engine to run for a time after the engine start switch key is turned to the OFF position to cool the engine and system components. The engine start switch key may be removed.

Note: The DEF purge process will run for 2 minutes once the engine is shut down and must complete. The purge process may occur during delayed engine shutdown. Do not turn off battery disconnect switch during the purge process. Do not turn off the battery power disconnect switch until the battery disconnect switch indicator lamp has turned off. If the purge process does not complete, a diagnostic code will become active.

Note: There may be regulations that define the requirements for the operator and/or support personnel to be present when the engine is running.

WARNING

Leaving the machine unattended when the engine is running may result in personal injury or death. Before leaving the machine operator station, neutralize the travel controls, lower the work tools to the ground and deactivate all work tools, and place the lever for the hydraulic lockout control in the LOCKED position.

Note: Leaving the engine unattended while running may result in property damage in the event of a malfunction.

Turn the engine start switch to the OFF position.

Delayed Engine Shutdown – The delayed engine shutdown indicator will illuminate or the following text will be displayed, ENGINE COOLDOWN ACTIVE.

Delayed engine shutdown will run whenever the exhaust temperature is above a threshold at engine shutdown. Delayed engine shutdown will run for a minimum of 76 seconds and will continue to run until the engine and system components are cooled. The default maximum run time is 7 minutes.

Note: An authorized dealer can change the maximum run time value up to 30 minutes, but the default setting is 7 minutes.

Note: To override delayed engine shutdown and stop the engine, turn the engine start switch to the STOP position. Overriding delayed engine shutdown may reduce engine and system component life. A warning message and/or audible alarm will be initiated and a fault code will be logged for improper engine shutdown.

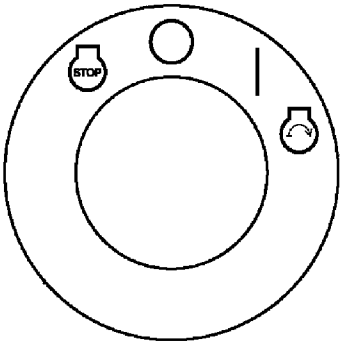

Illustration 58 g02362719

Note: At any time during a delayed engine shutdown, the engine start switch may be turned to the ON position. The engine may be placed back into service.

i05812522

Manual Stop Procedure

SMCS Code: 1000; 7418

NOTICE
Stopping the engine immediately after it has been working under load can result in overheating and accelerated wear of the engine components.

If the engine has been operating at high rpm and/or high loads, run at low idle for at least three minutes to reduce and stabilize internal engine temperature before stopping the engine.

Avoiding hot engine shutdowns will maximize turbocharger shaft and bearing life.

Note: Individual applications have different control systems. Ensure that the shutoff procedures are understood. Use the following general guidelines in order to stop the engine.

1. Remove the load from the engine so that the engine has no more than 30% power.

2. Run the engine at the programmed low idle speed for at least 3 minutes.

3. After the cool down period, turn the start switch to the OFF position.

i01465494

After Stopping Engine

SMCS Code: 1000

Note: Before you check the engine oil, do not operate the engine for at least 10 minutes in order to allow the engine oil to return to the oil pan.

- Check the crankcase oil level. Maintain the oil level between the “ADD” mark and the “FULL” mark on the oil level gauge.
- If necessary, perform minor adjustments. Repair any leaks and tighten any loose bolts.
- Note the service hour meter reading. Perform the maintenance that is in the Operation and Maintenance Manual, “Maintenance Interval Schedule”.
- Fill the fuel tank in order to help prevent accumulation of moisture in the fuel. Do not overfill the fuel tank.

NOTICE
Only use antifreeze/coolant mixtures recommended in the Coolant Specifications that are in the Operation and Maintenance Manual. Failure to do so can cause engine damage.

- Allow the engine to cool. Check the coolant level.
- If freezing temperatures are expected, check the coolant for proper antifreeze protection. The cooling system must be protected against freezing to the lowest expected outside temperature. Add the proper coolant/water mixture, if necessary.
- Perform all required periodic maintenance on all driven equipment. This maintenance is outlined in the instructions from the OEM.

Maintenance Section

Refill Capacities

i04423880

Refill Capacities

SMCS Code: 1000; 1348; 1395; 7560

Refer to this Operation and Maintenance Manual, “Fluid Recommendations” for information about the fluids which are acceptable for this engine.

Note: Refer to Special Publication, SEBU6251, “CaterpillarCommercial Diesel Engine Fluids Recommendations” for additional information.

Lubricant Refill Capacity

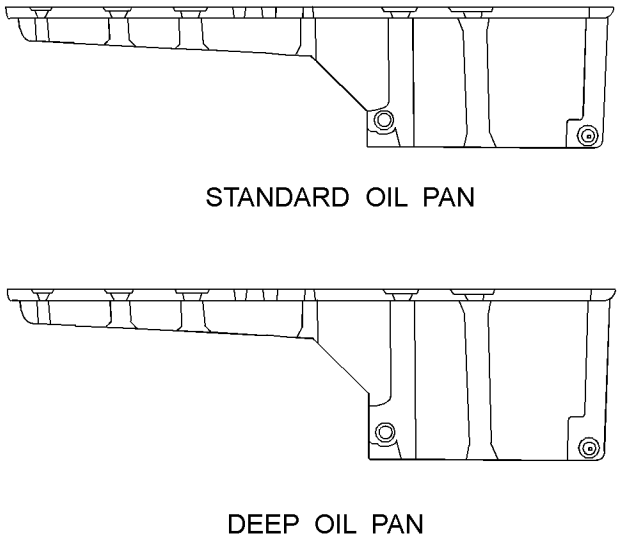

Illustration 59 g02293575
Standard and deep oil pans

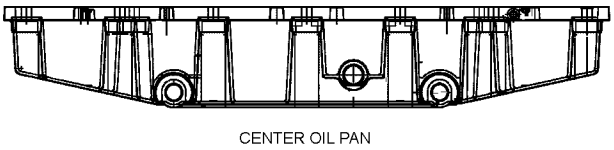

Illustration 60 g02289293
Center oil pan

Table 4

C13 Industrial Engine Approximate Refill Capacities		
Oil Sump(1)	**Liters**	**Quarts**
Standard Oil Pan	32 L	33.8 qt
Deep Oil Pan	37 L	39.1 qt
Center Oil Pan	30 L	31.7 qt

(1) These values are approximate capacities for the crankcase oil sump which include the standard oil filters that are installed at the factory. Engines with auxiliary oil filters will require additional oil. Refer to the OEM specifications for the capacity of the auxiliary oil filter.

The refill capacities for the engine crankcase reflect the approximate capacity of the crankcase or sump plus standard oil filters. Auxiliary oil filter systems will require additional oil. Refer to the OEM specifications for the capacity of the auxiliary oil filter.

Coolant Refill Capacity

To maintain the cooling system, the total cooling system capacity must be known. The capacity of the total cooling system will vary. The capacity will depend on the size of the radiator (capacity). Table 5 should be completed by the customer for the maintenance of the cooling system.

Table 5

Approximate Capacity of the Cooling System		
Compartment or System	Liters	Quarts
Total Cooling System (1)		

(1) The total cooling system capacity includes the following components:the engine block, the radiator and all coolant hoses and lines.

i05268614

Fluid Recommendations

SMCS Code: 1280; 1348; 1395; 7560

NOTICE
Every attempt is made to provide accurate, up-to-date information. By the use of this document, you agree that Caterpillar Inc. is not responsible for errors or omissions.

NOTICE
These recommendations are subject to change without prior notice. Contact your Caterpillar dealer for the most up to date recommendations.

Refer to Special Publication, SEBU6251, “Cat Commercial Diesel Engine Fluids Recommendations” for additional information.

Refer to this Operation and Maintenance Manual, “Severe Service Application” for information about operating an engine in a severe service application.

Note: Instructions for the installation of the filter are printed on the side of each Cat spin-on filter. For filters that are not Cat filters, refer to the installation instructions that are provided by the supplier of the filter.

Diesel Engine Oil

Cat DEO (Diesel Engine Oil)

Due to significant variations in the quality and in the performance of commercially available oils, Caterpillar makes the following recommendations:

- **Cat DEO-ULS (Diesel Engine Oil Ultra Low Sulfur) (SAE 5W-40)**
- **Cat DEO-ULS (Diesel Engine Oil Ultra Low Sulfur) (SAE 10W-30)**
- **Cat DEO-ULS (Diesel Engine Oil Ultra Low Sulfur) (SAE 15W-40)**

Engine Oil

Cat oils have been developed and tested in order to provide the full performance and life that has been designed and built into Cat engines.

Cat DEO-ULS or oils that meet the Cat ECF-3 specification and the API CJ-4 are required for use in the applications listed below. Cat DEO-ULS and oils meeting Cat ECF-3 specification and the API CJ-4 and ACEA E9 oil categories have been developed with limited sulfated ash, phosphorus, and sulfur. These chemical limits are designed to maintain the expected aftertreatment devices life, performance, and service interval. If oils meeting the Cat ECF-3 specification and the API CJ-4 specifications are not available, oils meeting ACEA E9 may be used. ACEA E9 oils meet the chemical limits designed to maintain aftertreatment device life. ACEA E9 oils are validated using some but not all ECF-3 and API CJ-4 standard engine performance tests. Consult your oil supplier when considering use of an oil that is not Cat ECF-3 or API CJ-4 qualified.

Failure to meet the listed requirements will damage aftertreatment-equipped engines and can negatively impact the performance of the aftertreatment devices. The Diesel Particulate Filter (DPF) will plug sooner and require more frequent DPF ash service intervals.

Typical aftertreatment systems include the following:

- Diesel Particulate Filters (DPF)
- Diesel Oxidation Catalysts (DOC)
- Selective Catalytic Reduction (SCR)
- Lean NOx Traps (LNT)

Other systems may apply.

Table 6

Lubricant Viscosities for Ambient Temperatures						
Compartment or System	Oil Type and Performance Requirements	Oil Viscosities	°C		°F	
			Min	Max	Min	Max
Engine Crankcase	Cat DEO-ULS Cold Weather	SAE 0W-40	−40	40	−40	104
	Cat DEO-ULS	SAE 10W-30	−18	40	0	104
	Cat DEO-ULS	SAE 15W-40	−9.5	50	15	122

NOTICE
Oil Renewal systems should not be used in engines equipped with aftertreatment systems. Reduced life or damage to the aftertreatment may occur.

S·O·S Services Oil Analysis

NOTICE
These recommendations are subject to change without prior notice. Contact your Caterpillar dealer for the most up to date recommendations.

Caterpillar has developed a maintenance tool that evaluates oil degradation. the maintenance management also detects the early signs of wear on internal components. The Cat tool for oil analysis is called S·O·S Oil Analysis and the tool is part of the S·O·S Services program. S·O·S Oil Analysis divides oil analysis into four categories:

- Component wear rate
- Oil condition
- Oil contamination
- Identification of oil

These four types of analysis are used to monitor the condition of your equipment. The four types of analysis will also help you identify potential problems. A properly administered S·O·S Oil Analysis program will reduce repair costs and the program will lessen the impact of downtime.

The S·O·S Oil Analysis program uses a wide range of tests to determine the condition of the oil and the lubricated compartment. Guidelines that are based on experience and a correlation to failures have been established for these tests. Exceeding one or more of these guidelines could indicate serious fluid degradation or a pending component failure. A trained person at your Cat dealership should make the final analysis.

NOTICE
Always use a designated pump for oil sampling, and use a separate designated pump for coolant sampling. Using the same pump for both types of samples may contaminate the samples that are being drawn. This contaminate may cause a false analysis and an incorrect interpretation that could lead to concerns by both dealers and customers.

Refer to Special Publication, SEBU6251, “Cat Commercial Diesel Engine Fluids Recommendations” in order to obtain additional information about S·O·S Services oil analysis. You can also contact your local Cat dealer in order to obtain additional information about the S·O·S Services Oil Analysis program.

Diesel Fuel Recommendations

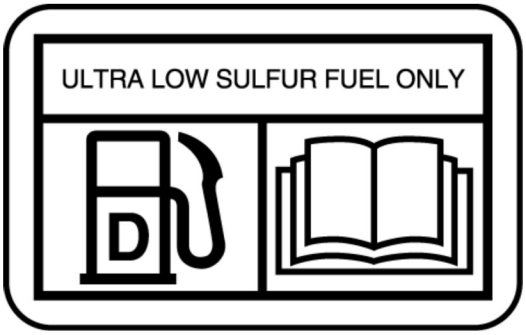

Illustration 61 g02157153
NACD Film

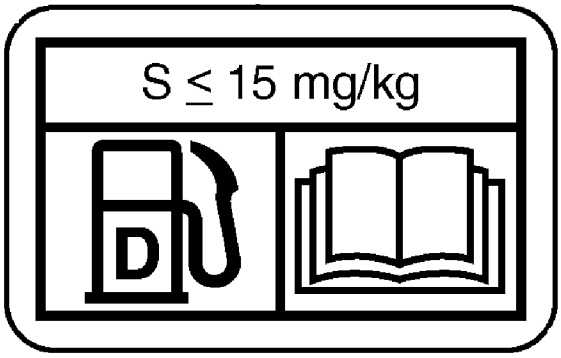

Illustration 62 g02052934

EAME Film

Diesel fuel must meet “Cat Specification for Distillate Fuel” and the latest versions of “ASTM D975” or “EN 590” in order to ensure optimum engine performance. Refer to Special Publication, SEBU6251, “Cat Commercial Diesel Engine Fluids Recommendations” for the latest fuel information and for Cat fuel specification. This manual may be found on the Web at Safety.Cat.com.

NOTICE

Ultra Low Sulfur Diesel (ULSD) fuel 0.0015 percent (≤15 ppm (mg/kg)) sulfur is required by regulation for use in engines certified to nonroad Tier 4 standards (U.S. EPA Tier 4 certified) and that are equipped with exhaust aftertreatment systems.

European ULSD 0.0010 percent (≤10ppm (mg/kg)) sulfur fuel is required by regulation for use in engines certified to European nonroad Stage IIIB and newer standards and are equipped with exhaust aftertreatment systems.

Misfueling with fuels of higher sulfur level can have the following negative effects:

- **Shorten the time interval between aftertreatment device service intervals (cause the need for more frequent service intervals)**
- **Adversely impact the performance and life of aftertreatment devices (cause loss of performance)**
- **Reduce regeneration intervals of aftertreatment devices**
- Reduce engine efficiency and durability.
- Increase the wear.
- Increase the corrosion.
- Increase the deposits.
- Lower fuel economy
- Shorten the time period between oil drain intervals (more frequent oil drain intervals).
- Increase overall operating costs.

Failures that result from the use of improper fuels are not Cat factory defects. Therefore the cost of repairs would not be covered by a Cat warranty.

Cat does not require the use of ULSD in off road and machine applications that are not Tier 4/Stage IIIB certified engines. ULSD is not required in engines that are not equipped with after treatment devices. For Tier 4/Stage IIIB/Stage IV certified engines always follow operating instructions. Fuel tank inlet labels are installed in order to ensure that the correct fuels are used.

Refer to Special Publication, SEBU6251, “Cat Commercial Diesel Engine Fluids Recommendations” for more details about fuels, lubricants, and Tier 4 requirements. This manual may be found on the Web at Safety.Cat.com.

Lubricating Grease

NOTICE

These recommendations are subject to change without prior notice. Contact your Caterpillar dealer for the most up to date recommendations.

Cat provides various greases that vary in performance from a moderate performance to high performance. Cat greases service the entire line of Cat products in the wide variety of climates throughout the world. From this variety of Cat grease products, you can find a Cat grease that will meet or exceed the performance requirements of most engines.

The performance requirements of your engine must be determined before you select any Cat grease. Consult the recommendations for greases that are made by the OEM for the equipment. Then, consult with your Cat dealer for a list of greases that have the performance specifications and the available sizes of containers.

Note: Always choose grease that meets or exceeds the recommendations that are specified by the equipment manufacturer for the application.

If it is necessary to choose a single grease to use for all of the equipment at one site, always choose a grease that meets or exceeds the requirements of the most demanding application. Remember that the products which barely meet the minimum performance requirements can be expected to produce the minimum lives of your parts. False economy is being used if a grease is purchased with the lowest cost as the only consideration. Instead, use the grease that yields the lowest total operating cost. This cost should be based on an analysis that includes the costs of parts, labor, downtime, and the cost of the amount of grease that is required.

Note: Purge all of the old grease from a joint before you change from one type of grease to another type of grease. Some greases are not chemically compatible with other greases. Consult your supplier in order to determine if the greases are compatible.

If you are not certain that the old grease is compatible with the new grease, purge the old grease from the system before applying the new grease.

Note: All Cat greases are chemically compatible with each other. Mixing of Cat greases does not result in an adverse chemical reaction. However, mixing of Cat greases may result in reduced performance.

Non-Cat commercial greases are as a group second choice greases. Within this grouping of second choice greases, there are tiered levels of performance. For more information, refer to Special Publication, SEBU6251, “Cat Commercial Diesel Engines Fluids Recommendations”.

Coolant

NOTICE
These recommendations are subject to change without prior notice. Contact your Caterpillar dealer for the most up to date recommendations.

NOTICE
Never add coolant to an overheated engine. Engine damage could result. Allow the engine to cool first.

NOTICE
Frequently check the specific gravity of the coolant for proper freeze protection or for anti-boil protection.

NOTICE
Never operate an engine without water temperature regulators in the cooling system. Water temperature regulators help to maintain the engine coolant at the proper operating temperature. Cooling system problems can develop without water temperature regulators.

The following two coolants are used in Cat Diesel Engines :

Preferred – Cat ELC (Extended Life Coolant) or a commercial extended life coolant that meets the Cat Engine Coolant-1 (EC-1) specification.

Acceptable – Cat DEAC (Diesel Engine Antifreeze/Coolant) or a commercial heavy-duty coolant that meets “ASTM D4985”, or “ASTM D6210” specifications

Note: Cat DEAC does not require a treatment with a Supplemental Coolant Additive (SCA) at the initial fill. However, a commercial heavy-duty coolant that only meets the “ASTM D4985” specification will require a treatment with an SCA at the initial fill. A commercial heavy-duty coolant that meets the “ASTM D6210” specification will not require a treatment with an SCA at the initial fill. Read the label or the instructions that are provided by the manufacturer of the commercial heavy-duty coolant.

Note: These coolants will require a treatment with a supplemental coolant additive on a maintenance basis.

Table 7

Service Life Before Flushing and Before Refilling	
Coolant	**Service Life(1)**
Cat ELC	12,000 hours, or 6 years
Commercial coolant that meets the Cat EC-1 specification	6000 hours, or 6 years
Cat DEAC	3000 hours, or 3 years
Commercial Heavy-Duty Coolant that meets “ASTM D4985” or “ASTM D6210”	3000 hours, or 1 year

(1) Use the interval that occurs first.

Note: Add the Cat ELC Extender at the halfway point of the coolant change interval.

Note: These coolant change intervals are only possible with annual S·O·S Services Level 2 coolant sampling and analysis.

S·O·S Services Coolant Analysis

Table 8

Recommended Interval		
Type of Coolant	**Level 1**	**Level 2**
DEAC	Every 500 Hours(1) (2)	Every 2000 Hours or Yearly(1) (3)
ELC	Optional(3)	Yearly(3)

(1) This interval is recommended for the sampling of all conventional heavy-duty coolant.
(2) This interval is also recommended for the sampling of a commercial coolant that meets the Cat (Engine Coolant specification - 1) requirement.
(3) The Level 2 coolant analysis should be performed sooner if a problem is suspected or identified.

Testing the engine coolant is important to ensure that the engine is protected from internal cavitation and from corrosion. The analysis also tests the ability of the coolant to protect the engine from boiling and from freezing. The S·O·S Coolant Analysis can be performed at your Cat dealer. Cat S·O·S Coolant Analysis is the best way to monitor the condition of your coolant and your cooling system. S·O·S Coolant Analysis is a program that is based on periodic samples.

NOTICE
Always use a designated pump for oil sampling, and use a separate designated pump for coolant sampling. Using the same pump for both types of samples may contaminate the samples that are being drawn. This contaminate may cause a false analysis and an incorrect interpretation that could lead to concerns by both dealers and customers.

For more information, refer to Special Publication, SEBU6251, “Cat Commercial Diesel Engines Fluids Recommendations”

Diesel Exhaust Fluid

General Information

Diesel Exhaust Fluid (DEF) is a liquid that is injected into the exhaust system of engines equipped with Selective Catalytic Reduction (SCR) systems. SCR reduces emissions of nitrogen oxides (NOx) in diesel engine exhaust.

Diesel Exhaust Fluid (DEF) is also known under other names including Aqueous Urea Solution (AUS) 32, AdBlue, or generically referred to as urea.

In engines equipped with SCR emissions reduction system, DEF is injected in controlled amounts into the engine exhaust stream. At the elevated exhaust temperature, urea in DEF is converted to ammonia. The ammonia chemically reacts with NOx in diesel exhaust in the presence of the SCR catalyst. The reaction converts NOx into harmless nitrogen (N2) and water (H2O).

DEF Recommendations

For use in Cat engines, DEF must meet all the requirements defined by “ISO 22241-1” Requirements.

Caterpillar recommends the use of DEF available through the Cat parts ordering system for use in Cat engines equipped with SCR systems. Refer to Table 9 for part number information:

Table 9

Cat Part Number	Container Size
350-8733	2.5 gal bottle
350-8734	1000-L tote

In North America, commercial DEF that is API approved and meets all the requirements defined in “ISO 22241-1” may be used in Cat engines that are equipped with SCR systems.

Outside of North America, commercial DEF that meets all requirements defined in “ISO 22241-1” may be used in Cat engines that are equipped with SCR systems.

The supplier should provide documentation to prove the DEF is compliant with the requirements of “ISO 22241-1”.

NOTICE
Cat does not warrant the quality or performance of non-Cat fluids.

NOTICE
Do not use agriculture grade urea solutions. Do not use any fluids that do not meet “ISO 22241-1” Requirements in SCR emissions reduction systems. Use of these fluids can result in numerous problems including damage to SCR equipment and a reduction in NOx conversion efficiency.

DEF is a solution of solid urea that is dissolved in demineralized water to produce a final concentration of 32.5% urea. DEF concentration of 32.5% is optimal for use in SCR systems. DEF solution of 32.5% urea has the lowest attainable freeze point of −11.5° C (11.3° F). DEF concentrations that are higher or lower than 32.5% have higher freeze points. DEF dosing systems and “ISO 22241-1” specifications are designed for a solution that is approximately 32.5%.

Caterpillar offers a refractometer, Cat part number 360-0774, that can be used to measure DEF concentration. Follow the instructions provided with the instrument. Appropriate commercial portable refractometers can be used to determine urea concentration. Follow the instructions from the manufacturer.

DEF Guidelines

DEF solution is typically colorless and clear. Changes to color or clarity are indicators of quality issues. Quality of DEF can degrade when stored and handled inappropriately or if DEF is not protected from contamination. Details are provided below.

If quality issues are suspected, testing of DEF should focus on urea percentage, alkalinity as NH3 and biuret content. DEF that does not pass all these tests or that is no longer clear should not be used.

Materials compatibility

DEF is corrosive. Due to the corrosion caused, DEF must be stored in tanks constructed of approved materials. Recommended storage materials:

Stainless Steels:

- 304 (S30400)
- 304L (S30403)
- 316 (S31600)
- 316L (S31603)

Alloys and metals:

- Chromium Nickel (CrNi)
- Chromium Nickel Molybdenum (CrNiMo)
- Titanium

Non-metallic materials:

- Polyethylene
- Polypropylene
- Polyisobutylene
- Teflon (PFA)
- Polyfluoroethylene (PFE)
- Polyvinylidene fluoride (PVDF)
- Polytetrafluoroethylene (PTFE)

Materials NOT compatible with DEF solutions include Aluminum, Magnesium, Zinc, Nickel coatings, Silver and Carbon steel and Solders containing any of the above. Unexpected reactions may occur if DEF solutions come in contact with any non-compatible material or unknown materials.

Bulk storage

Follow all local regulations covering bulk storage tanks. Follow proper tank construction guidelines. Tank volume typically should be 110% of planned capacity. Appropriately vent indoor tanks. Plan for control of overflow of the tank. Heat tanks that dispense DEF in cold climates.

Bulk tank breathers should be fitted with filtration to keep airborne debris from entering the tank. Desiccant breathers should not be used because water will be absorbed, which potentially can alter DEF concentration.

Handling

Follow all local regulations covering transport and handling. DEF transport temperature is recommended to be −5° C (23° F) to 25° C (77° F). All transfer equipment and intermediate containers should be used exclusively for DEF. Containers should not be reused for any other fluids. Ensure that transfer equipment is made from DEF-compatible materials. Recommended material for hoses and other non-metallic transfer equipment include:

- Nitrile Rubber (NBR)
- Fluoroelastomer (FKM)
- Ethylene Propylene Diene Monomer (EPDM)

The condition of hoses and other nonmetallics that are used with DEF should be monitored for signs of degradation. DEF leaks are easily recognizable by white urea crystals that accumulate at the site of the leak. Solid urea can be corrosive to galvanized or unalloyed steel, aluminum, copper, and brass. Leaks should be repaired immediately to avoid damage to surrounding hardware.

Cleanliness

Contaminants can degrade the quality and life of DEF. Filtering DEF is recommended when dispensed into the DEF tank. Filters should be compatible with DEF and should be used exclusively with DEF. Check with the filter supplier to confirm compatibility with DEF before using. Mesh-type filters using compatible metals, such as stainless steel, are recommended. Paper (cellulose) media and some synthetic filter media are not recommended because of degradation during use.

Care should be taken when dispensing DEF. Spills should be cleaned immediately. Machine or engine surfaces should be wiped clean and rinsed with water. Caution should be used when dispensing DEF near an engine that has recently been running. Spilling DEF onto hot components will cause harmful vapors.

Stability

DEF fluid is stable when stored and handled properly. The quality of DEF rapidly degrades when stored at high temperatures. The ideal storage temperature for DEF is between −9° C (15.8° F) and 25° C (77° F). DEF that is stored above 35° C (95° F) for longer than 1 month must be tested before use. Testing should evaluate Urea Percentage, Alkalinity as NH3 and Biuret content.

The length of storage of DEF is listed in the following table:

Table 10

Storage Temperature	Expected DEF Life
Below 25° C (77° F)	18 months
25° C (77° F) to 30° C (86° F)	12 months
30° C (86° F) to 35° C (95° F)	6 months
Above 35° C (95° F)	test quality before use

Refer to "ISO 22241" document series for more information about DEF quality control.

Note: Dispose of all fluids according to applicable regulations and mandates.

Fuel Additives

Cat Diesel Fuel Conditioner and Cat Fuel System Cleaner are available for use when needed. These products are applicable to diesel and biodiesel fuels. Consult your Cat dealer for availability.

Biodiesel

Biodiesel is a fuel that can be made from various renewable resources that include vegetable oils, animal fat, and waste cooking oil. Soybean oil and rapeseed oil are the primary vegetable oil sources. In order to use any of these oils or fats as fuel, the oils or fats are chemically processed (esterified). The water and contaminants are removed.

U.S. distillate diesel fuel specification "ASTM D975-09a" includes up to B5 (5 percent) biodiesel. Currently, any diesel fuel in the U.S. may contain up to B5 biodiesel fuel.

European distillate diesel fuel specification "EN 590" includes up to B5 (5 percent) and in some regions up to B7 (7 percent) biodiesel. Any diesel fuel in Europe may contain up to B5 or in some regions up to B7 biodiesel fuel.

Note: The diesel portion used in the biodiesel blend must be Ultra Low Sulfur Diesel (15 ppm sulfur or less, per "ASTM D975"). In Europe the diesel fuel portion used in the biodiesel blend must be sulfur free diesel (10 ppm sulfur or less, per "EN 590"). The final blend must have 15 ppm sulfur or less.

When biodiesel fuel is used, certain guidelines must be followed. Biodiesel fuel can influence the engine oil, aftertreatment devices, non-metallic, fuel system components, and others. Biodiesel fuel has limited storage life and has limited oxidation stability. Follow the guidelines and requirements for engines that are seasonally operated.

In order to reduce the risks associated with the use of biodiesel, the final biodiesel blend and the biodiesel fuel used must meet specific blending requirements.

All the guidelines and requirements are provided in the latest revision of Special Publication, SEBU6251, "Cat Commercial Diesel Engine Fluids Recommendations". This manual may be found on the Web at Safety.Cat.com.

Maintenance Recommendations

i02909163

System Pressure Release

SMCS Code: 1250; 1300; 1350; 5050

Coolant System

WARNING

Pressurized system: Hot coolant can cause serious burn. To open cap, stop engine, wait until radiator is cool. Then loosen cap slowly to relieve the pressure.

To relieve the pressure from the coolant system, turn off the engine. Allow the cooling system pressure cap to cool. Remove the cooling system pressure cap slowly in order to relieve pressure.

Fuel System

To relieve the pressure from the fuel system, turn off the engine.

High Pressure Fuel Lines (If Equipped)

WARNING

Contact with high pressure fuel may cause fluid penetration and burn hazards. High pressure fuel spray may cause a fire hazard. Failure to follow these inspection, maintenance and service instructions may cause personal injury or death.

The high pressure fuel lines are the fuel lines that are between the high pressure fuel pump and the high pressure fuel manifold and the fuel lines that are between the fuel manifold and cylinder head. These fuel lines are different from fuel lines on other fuel systems.

This is because of the following differences:

- The high pressure fuel lines are constantly charged with high pressure.
- The internal pressures of the high pressure fuel lines are higher than other types of fuel system.

Before any service or repair is performed on the engine fuel lines, perform the following tasks:

1. Stop the engine.

2. Wait for ten minutes.

Do not loosen the high pressure fuel lines in order to remove air pressure from the fuel system.

Engine Oil

To relieve pressure from the lubricating system, turn off the engine.

i05182568

Welding on Engines with Electronic Controls

SMCS Code: 1000

NOTICE

Because the strength of the frame may decrease, some manufacturers do not recommend welding onto a chassis frame or rail. Consult the OEM of the equipment or your Cat dealer regarding welding on a chassis frame or rail.

Proper welding procedures are necessary in order to avoid damage to the engine Electronic Control Module (ECM), Clean Emissions Module (CEM), sensors, and associated components. When possible, remove the component from the unit and then weld the component. If removal of the component is not possible, the following procedure must be followed when you weld on a unit that is equipped with a Caterpillar Electronic Engine. The following procedure is considered to be the safest procedure to weld on a component. This procedure should provide a minimum risk of damage to electronic components.

NOTICE

Do not ground the welder to electrical components such as the ECM or sensors. Improper grounding can cause damage to the drive train, the bearings, hydraulic components, electrical components, and other components.

Do not ground the welder across the centerline of the package. Improper grounding could cause damage to the bearings, the crankshaft, the rotor shaft, and other components.

Clamp the ground cable from the welder to the component that will be welded. Place the clamp as close as possible to the weld. This will help reduce the possibility of damage.

Note: Perform the welding in areas that are free from explosive hazards.

1. Stop the engine. Turn the switched power to the OFF position.

2. Disconnect the negative battery cable from the battery. If a battery disconnect switch is provided, open the switch.

3. Disconnect the J1/P1 and J2/P2 connectors from the ECM and. Disconnect the wiring from the CEM. Move the harnesses to a position that will not allow the harnesses to contact with any of the ECM, CEM, or pins accidentally.

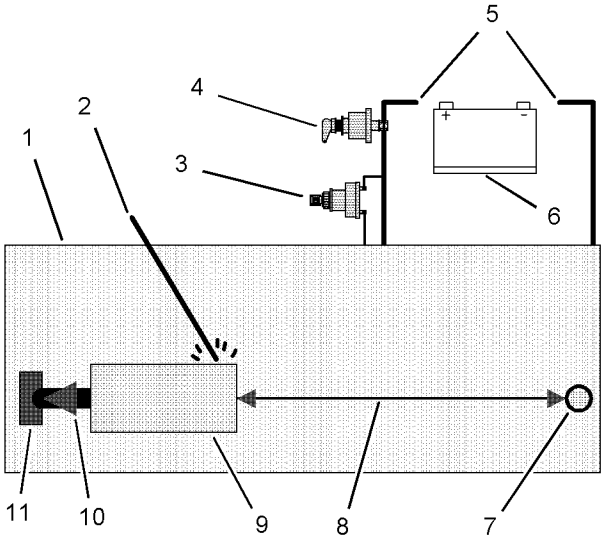

Illustration 63 g01075639

Use the example above. The current flow from the welder to the ground clamp of the welder will not damage any associated components.

(1) Engine
(2) Welding electrode
(3) Keyswitch in the OFF position
(4) Battery disconnect switch in the open position
(5) Disconnected battery cables
(6) Battery
(7) Electrical/Electronic component
(8) Minimum distance between the component that is being welded and any electrical/electronic component
(9) The component that is being welded
(10) Current path of the welder
(11) Ground clamp for the welder

4. Connect the welding ground cable directly to the part that will be welded. Place the ground cable as close as possible to the weld in order to reduce the possibility of welding current damage to bearings, hydraulic components, electrical components, and ground straps.

Note: If electrical/electronic components are used as a ground for the welder, or electrical/electronic components are located between the welder ground and the weld, current flow from the welder could severely damage the component.

5. Protect the wiring harness from welding debris and spatter.

6. Use standard welding practices to weld the materials.

i04889860

Severe Service Application

SMCS Code: 1000

An engine which operates outside of normal conditions is operating in a severe service application.

An engine that operates in a severe service application may need more frequent maintenance intervals in order to maximize the following conditions:

- Reliability
- Service life

The number of individual applications cause the impossibility of identifying all of the factors which may contribute to severe service operation. Consult your Cat dealer for the unique maintenance that may be necessary for your engine.

An application is a severe service application if any of the following conditions apply:

Severe Environmental Factors

- Frequent operation in dirty air
- Frequent operation at an altitude which is above 1525 m (5000 ft)
- Frequent operation in ambient temperatures which are above 32° C (90° F)
- Frequent operation in ambient temperatures which are below 0° C (32° F)

Severe Operating Conditions

- Frequent operation with inlet air which has a corrosive content
- Operation with inlet air which has a combustible content
- Operation which is outside of the intended application
- Operation with a plugged fuel filter
- Extended operation at low idle (more than 20% of hours)
- Frequent cold starts at temperatures below 0° C (32° F)
- Frequent dry starts (starting after more than 72 hours of shutdown)
- Frequent hot shutdowns (shutting down the engine without the minimum of 2 minutes to 5 minutes of cool down time)
- Operation above the engine rated speed
- Operation below the peak torque speed
- Operating with fuel which does not meet the standards for distillate diesel fuel as stated in Special Publication, SEBU6251, “Cat Commercial Diesel Engine Fluids Recommendations”, “Distillate Diesel Fuel”
- Operating with a blend of distillate fuel which contains more than 20 percent biodiesel

Improper Maintenance Procedures (Maintenance Procedures Which May Contribute to a Severe Service Application)

- Inadequate maintenance of fuel storage tanks from causes such as excessive water, sediment, and microorganism growth.
- Extending maintenance intervals beyond the recommended intervals
- Using fluids which are not recommended in Special Publication, SEBU6251, “Cat Commercial Diesel Engine Fluids Recommendations”
- Extending maintenance intervals for changing the engine oil and engine coolant without S·O·S validation
- Extending maintenance intervals for changing air filters, oil filters, and fuel filters
- Failure to use a water separator
- Using filters which are not recommended by Special Publication, PEWJ0074, “2008 Cat Filter and Fluid Application Guide”

i05799242

Maintenance Interval Schedule

SMCS Code: 1000; 4450; 7500

Ensure that all safety information, warnings, and instructions are read and understood before any operation or any maintenance procedures are performed. The user is responsible for the performance of all maintenance including the following procedures: all adjustments, the use of proper lubricants, fluids, filters and the installation of new components due to normal wear and aging . The performance of this product may be diminished if proper maintenance intervals and procedures are not followed. Components may experience accelerated wear if proper maintenance intervals and procedures are not followed.

Note: Use whichever of the following that occurs first in order to determine the maintenance intervals: fuel consumption, service hours and calendar time . Before each consecutive interval is performed, all maintenance from the previous intervals must be performed.

Products that operate in severe operating conditions may require more frequent maintenance.

When Required

“Battery - Recycle” 66
“Battery - Replace”....66
“Battery or Battery Cable - Disconnect”....67
“DEF Filler Screen - Clean” 77
“Diesel Exhaust Fluid - Fill”....79
“Engine - Clean”....82
“Engine Air Cleaner Element (Dual Element/Box Type) - Replace” 82
“Engine Air Cleaner Element (Dual Element/Canister Type) - Clean/Replace”....84
“Engine Air Cleaner Element (Single Element/ Canister Type) - Clean/Replace” 86
“Engine Storage Procedure - Check” 91
“Fuel System - Prime”....92
“Fuel Tank Water and Sediment - Drain” 95
“Radiator - Clean” 103

Daily

“Air Tank Moisture and Sediment - Drain” 65
“Coolant Level - Check”....74
“Driven Equipment - Check” 81
“Engine Air Cleaner Service Indicator - Inspect” 88
“Engine Oil Level - Check”....88
“Fuel System Primary Filter/Water Separator - Drain” 93
“Power Take-Off Clutch - Check”.... 103
“Walk-Around Inspection”.... 104

Every 250 Service Hours

“Belts - Inspect/Replace” 68
“Engine Oil Sample - Obtain”....89
“Grounding Stud - Inspect/Clean/Tighten”....97

Every 500 Service Hours

“Battery Electrolyte Level - Check” 66
“Belts - Inspect/Adjust/Replace” 67
“Coolant Sample (Level 1) - Obtain”....75
“Cooling System Supplemental Coolant Additive (SCA) - Test/Add”....76
“Engine Oil and Filter - Change” 90
“Fuel System Primary Filter (Water Separator) Element - Replace” 92
“Fuel System Secondary Filter - Replace” 94
“Hoses and Clamps - Inspect/Replace”....97

Every 2000 Service Hours

“Air Shutoff - Test” 65

Every 2000 Service Hours or 1 Year

“Coolant Sample (Level 2) - Obtain”....76
“Fumes Disposal Filter Element - Replace”....96

Every 2500 Service Hours

“Compression Brake - Inspect/Adjust/Replace” 70
“Engine Valve Lash - Check” 92

Every 3000 Service Hours or 3 Years

“Coolant (DEAC) - Change”....70

Every 4000 Service Hours

“Air Compressor - Check”....64

"Engine Mounts - Inspect" 88

"Starting Motor - Inspect" 104

Every 5000 Service Hours

"ARD Spark Plug - Clean".....63

"Diesel Exhaust Fluid Filter - Replace".....80

"Diesel Particulate Filter - Clean".....81

"Injector (Diesel Exhaust Fluid) - Replace"..... 100

Every 6000 Service Hours or 6 Years

"Coolant Extender (ELC) - Add" 73

Every 10 000 Service Hours

"DEF Filter (Sock) - Replace" 78

Every 12 000 Service Hours or 6 Years

"Coolant (ELC) - Change".....72

Every 492 100 L (130 000 US gal) of Fuel

"Overhaul Considerations" 100

i05798692

Maintenance Interval Schedule (Engines With Ratings Greater Than 439 hp)

SMCS Code: 1000; 4450; 7500

Ensure that all safety information, warnings, and instructions are read and understood before any operation or any maintenance procedures are performed. The user is responsible for the performance of all maintenance including the following procedures: all adjustments, the use of proper lubricants, fluids, filters and the installation of new components due to normal wear and aging . The performance of this product may be diminished if proper maintenance intervals and procedures are not followed. Components may experience accelerated wear if proper maintenance intervals and procedures are not followed.

Note: Use whichever of the following that occurs first in order to determine the maintenance intervals: fuel consumption, service hours and calendar time . Before each consecutive interval is performed, all maintenance from the previous intervals must be performed.

Products that operate in severe operating conditions may require more frequent maintenance.

When Required

"Battery - Recycle".....66

"Battery - Replace".....66

"Battery or Battery Cable - Disconnect".....67

"DEF Filler Screen - Clean" 77

"Diesel Exhaust Fluid - Fill".....79

"Engine - Clean".....82

"Engine Air Cleaner Element (Dual Element/Box Type) - Replace" 82

"Engine Air Cleaner Element (Dual Element/Canister Type) - Clean/Replace".....84

"Engine Air Cleaner Element (Single Element/ Canister Type) - Clean/Replace" 86

"Engine Storage Procedure - Check" 91

"Fuel System - Prime".....92

"Fuel Tank Water and Sediment - Drain" 95

"Radiator - Clean" 103

Daily

"Air Tank Moisture and Sediment - Drain" 65

"Coolant Level - Check".....74

"Driven Equipment - Check" 81

"Engine Air Cleaner Service Indicator - Inspect" 88

"Engine Oil Level - Check".....88

"Fuel System Primary Filter/Water Separator - Drain" 93

"Power Take-Off Clutch - Check"..... 103

"Walk-Around Inspection"..... 104

Every 250 Service Hours

"Belts - Inspect/Replace" 68

"Engine Oil Sample - Obtain".....89

"Grounding Stud - Inspect/Clean/Tighten".....97

Initial 500 Service Hours

"Engine Valve Lash - Check" 92

Every 500 Service Hours

"Battery Electrolyte Level - Check".....66

"Belts - Inspect/Adjust/Replace" 67
"Coolant Sample (Level 1) - Obtain" 75
"Cooling System Supplemental Coolant Additive (SCA) - Test/Add" 76
"Engine Oil and Filter - Change" 90
"Fuel System Primary Filter (Water Separator) Element - Replace" 92
"Fuel System Secondary Filter - Replace" 94
"Hoses and Clamps - Inspect/Replace" 97

Every 2000 Service Hours

"Air Shutoff - Test" 65

Every 2000 Service Hours or 1 Year

"Coolant Sample (Level 2) - Obtain" 76
"Fumes Disposal Filter Element - Replace" 96

Every 2500 Service Hours

"Compression Brake - Inspect/Adjust/Replace" 70
"Engine Valve Lash - Check" 92

Every 3000 Service Hours or 3 Years

"Coolant (DEAC) - Change" 70

Every 4000 Service Hours

"Air Compressor - Check" 64
"Engine Mounts - Inspect" 88
"Starting Motor - Inspect" 104

Every 5000 Service Hours

"ARD Spark Plug - Clean" 63
"Diesel Exhaust Fluid Filter - Replace" 80
"Diesel Particulate Filter - Clean" 81
"Injector (Diesel Exhaust Fluid) - Replace" 100

Every 6000 Service Hours or 6 Years

"Coolant Extender (ELC) - Add" 73

Every 10 000 Service Hours

"DEF Filter (Sock) - Replace" 78

Every 12 000 Service Hours or 6 Years

"Coolant (ELC) - Change" 72

Every 492 100 L (130 000 US gal) of Fuel

"Overhaul Considerations" 100

i05379868

ARD Spark Plug - Clean

SMCS Code: 1555-070

Removing the Spark Plug

NOTICE
If the engine is running or the key is in the ON position the ARD plug will continue to fire. Turn the key to the OFF position before servicing the ARD plug.

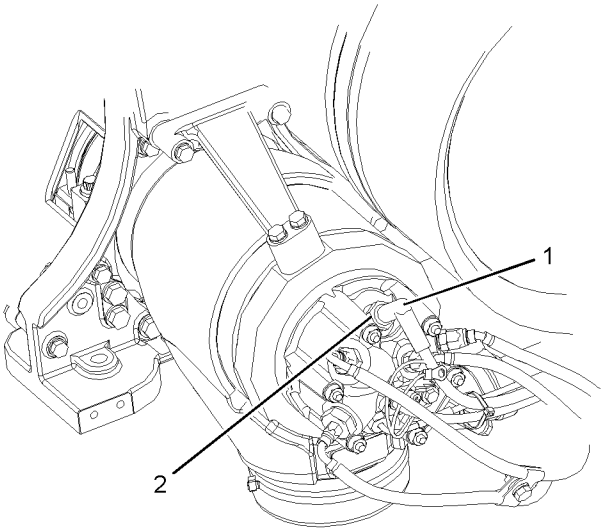

Illustration 64 g02139990

(1) Wiring harness
(2) Spark plug

1. Remove wire harness (1) from spark plug (2).

WARNING

Personal injury can result from air pressure.

Personal injury can result without following proper procedure. When using pressure air, wear a protective face shield and protective clothing.

The maximum air pressure for cleaning purposes must be reduced to 205 kPa (30 psi) when the air nozzle is deadheaded.

2. Debris may have collected in the spark plug well. Thoroughly remove any debris. Use compressed air. The maximum air pressure for cleaning purposes must be below 205 kPa (30 psi). Ensure that the area around the spark plug is clean and free of dirt and debris.

3. Use a deep well socket and a breaker bar to loosen the spark plug. If necessary, see your Caterpillar dealer for the part number of the socket. After the spark plug has been loosened, use the socket to remove the spark plug by hand in order to detect problems with the threads. After the spark plug has been removed, inspect the used spark plug and the gasket.

4. After removing the spark plug, clean the ground probe inside the ARD combustion head by running a 305 - 2389 Plug Bore Brush through the hole in the ARD combustion head. This tool scrapes debris from the seat and from the threads. Run the brush through the hole several times.

5. Carefully clean the spark plug using a nonmetallic cleaning pad. If the probe appears to be bent, replace the spark plug. Otherwise, install the original spark plug. Refer to Specifications manual for the correct torque value.

Note: The spark plug may be damaged if the spark plug is dropped. Do not install a spark plug that has been dropped.

NOTICE

Do not use a thread tap. A thread tap will remove metal unnecessarily. The threads could be stripped and the combustion group could be damaged.

Installing the Spark Plug

Note: Do not use anti-seize compound on the spark plug. Most of the heat is transferred through the threads and the seat area of the spark plug. Contact of the metal surfaces must be maintained in order to provide the heat transfer that is required.

1. Ensure that the spark plug is clean and free of dirt and oil.

NOTICE

Do not overtighten the spark plug. The shell can be cracked and the gasket can be deformed. The metal can deform and the gasket can be damaged. The shell can be stretched. This will loosen the seal that is between the shell and the insulator, allowing combustion pressure to blow past the seal. Serious damage to the engine can occur.

Use the proper torque.

2. Install the spark plug by hand until the spark plug contacts the ARD. Torque the spark plug to the proper specification. Refer to Specifications, “Spark Plug” for the proper torque specification.

3. Connect the wiring harness.

i03966490

Air Compressor - Check
(If equipped)

SMCS Code: 1803-535

WARNING

Do not disconnect the air line from the air compressor governor without purging the air brake and the auxiliary air systems. Failure to purge the air brake and the auxiliary air systems before removing the air compressor and/or the air lines could cause personal injury.

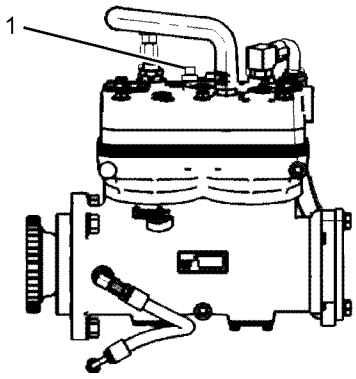

Illustration 65 g01212654

Typical example

(1) Pressure relief valve

WARNING

If the air compressor pressure relief valve that is mounted in the air compressor cylinder head is bypassing compressed air, there is a malfunction in the air system, possibly ice blockage. Under these conditions, your engine may have insufficient air for normal brake operation.

Do not operate the engine until the reason for the air bypass is identified and corrected. Failure to heed this warning could lead to property damage, personal injury, or death to the operator or bystanders.

The function of the pressure relief valve is to bypass air when there is a malfunction in the system for the air compressor.

The pressure relief valve for the air compressor releases air at 1723 kPa (250 psi). If the pressure relief valve for the air compressor exhausts, all personnel should be at a safe distance away from the air compressor. All personnel should also stay clear of the air compressor when the engine is operating and the air compressor is exposed.

Refer to the Service Manual or refer to the OEM specifications in order to find information concerning the air compressor. Consult your Caterpillar dealer for assistance.

i05341564

Air Shutoff - Test

SMCS Code: 1078-081

To ensure that the air shutoff valve always shuts down when the engine ingests gaseous fumes, perform the test below at each oil change. A test failure can indicate wear in the block off plate to valve body interface and/or the bearing system.

1. Place engine at low idle speed. Ensure all accessories that are normally used for the application are in use, like a fan, or power takeoffs.

2. Actuate the air shutoff manually. On electrical operator air shutoffs, utilize an applicable power supply or jumper cables from the battery to energize the air shut-off solenoid. Ensure that the solenoid receives only a momentary signal to prevent overheating. On hydraulic operator air shutoffs, found on some hazardous location units, actuate by pulling the emergency stop handle.

3. Ensure that air shutoff was actuated and that the engine comes to a complete stop.

Note: As every application has different parasitic loads and inertia, the duration for the problem to occur cannot be specified. However, if the engine stumbles or attempts to continue running, these symptoms may be an indication that worn components may need replacement.

If additional help is needed, contact the Dealer Solution Network.

NOTICE

Actuating the air shutoff valve may result in oil leakage past the shaft seal in some cases. Repeated actuation of the air shutoff valve during loaded operation of the engine can result in mechanical damage to the turbocharger and reduce turbocharger life.

i00847451

Air Tank Moisture and Sediment - Drain
(If Equipped)

SMCS Code: 1466-543-M&S

Moisture and sediment in the air starting system can cause the following conditions:

- Freezing
- Corrosion of internal parts
- Malfunction of the air starting system

WARNING

When opening the drain valve, wear protective gloves, a protective face shield, protective clothing, and protective shoes. Pressurized air could cause debris to be blown and result in personal injury.

1. Open the drain valve that is on the bottom of the air tank. Allow the moisture and sediment to drain.

2. Close the drain valve.

3. Check the air supply pressure. The air starting motor requires a minimum of 620 kPa (90 psi) of air pressure to operate properly. The maximum air pressure must not exceed 1550 kPa (225 psi). The normal air pressure will be 758 to 965 kPa (110 to 140 psi).

i02039199

Battery - Recycle

SMCS Code: 1401-005; 1401-510; 1401-535; 1401-561; 1401

Always recycle a battery. Never discard a battery. Return used batteries to one of the following locations:

- A battery supplier
- An authorized battery collection facility
- A recycling facility

i01878164

Battery - Replace

SMCS Code: 1401-510

WARNING

Batteries give off combustible gases which can explode. A spark can cause the combustible gases to ignite. This can result in severe personal injury or death.

Ensure proper ventilation for batteries that are in an enclosure. Follow the proper procedures in order to help prevent electrical arcs and/or sparks near batteries. Do not smoke when batteries are serviced.

WARNING

The battery cables or the batteries should not be removed with the battery cover in place. The battery cover should be removed before any servicing is attempted.

Removing the battery cables or the batteries with the cover in place may cause a battery explosion resulting in personal injury.

1. Switch the engine to the OFF position. Remove all electrical loads.
2. Turn off any battery chargers. Disconnect any battery chargers.
3. The NEGATIVE "-" cable connects the NEGATIVE "-" battery terminal to the NEGATIVE "-" terminal on the starter motor. Disconnect the cable from the NEGATIVE "-" battery terminal.
4. The POSITIVE "+" cable connects the POSITIVE "+" battery terminal to the POSITIVE "+" terminal on the starting motor. Disconnect the cable from the POSITIVE "+" battery terminal.

Note: Always recycle a battery. Never discard a battery. Return used batteries to an appropriate recycling facility.

5. Remove the used battery.
6. Install the new battery.

Note: Before the cables are connected, ensure that the engine start switch is OFF.

7. Connect the cable from the starting motor to the POSITIVE "+" battery terminal.
8. Connect the cable from the NEGATIVE "-" terminal on the starter motor to the NEGATIVE "-" battery terminal.

i02601752

Battery Electrolyte Level - Check

SMCS Code: 1401-535-FLV

When the engine is not run for long periods of time or when the engine is run for short periods, the batteries may not fully recharge. Ensure a full charge in order to help prevent the battery from freezing.

WARNING

All lead-acid batteries contain sulfuric acid which can burn the skin and clothing. Always wear a face shield and protective clothing when working on or near batteries.

1. Remove the filler caps. Maintain the electrolyte level to the "FULL" mark on the battery.

   If the addition of water is necessary, use distilled water. If distilled water is not available use clean water that is low in minerals. Do not use artificially softened water.

2. Check the condition of the electrolyte with the 245-5829 Coolant Battery Tester Refractometer.
3. Keep the batteries clean.

   Clean the battery case with one of the following cleaning solutions:

   - A mixture of 0.1 kg (0.2 lb) of baking soda and 1 L (1 qt) of clean water

- A mixture of 0.1 L (0.11 qt) of ammonia and 1 L (1 qt) of clean water

Thoroughly rinse the battery case with clean water.

Use a fine grade of sandpaper to clean the terminals and the cable clamps. Clean the items until the surfaces are bright or shiny. DO NOT remove material excessively. Excessive removal of material can cause the clamps to not fit properly. Coat the clamps and the terminals with 5N-5561 Silicone Lubricant, petroleum jelly or MPGM.

i01492654

Battery or Battery Cable - Disconnect

SMCS Code: 1401; 1402-029

WARNING

The battery cables or the batteries should not be removed with the battery cover in place. The battery cover should be removed before any servicing is attempted.

Removing the battery cables or the batteries with the cover in place may cause a battery explosion resulting in personal injury.

1. Turn the start switch to the OFF position. Turn the ignition switch (if equipped) to the OFF position and remove the key and all electrical loads.
2. Disconnect the negative battery terminal at the battery that goes to the start switch. Ensure that the cable cannot contact the terminal. When four 12 volt batteries are involved, the negative side of two batteries must be disconnected.
3. Tape the leads in order to help prevent accidental starting.
4. Proceed with necessary system repairs. Reverse the steps in order to reconnect all of the cables.

i02782163

Belts - Inspect/Adjust/Replace

SMCS Code: 1357-025; 1357-040; 1357-510

Inspection

Belt tension should be checked initially between the first 20 to 40 hours of engine operation.

To maximize the engine performance, inspect the belts for wear and for cracking. Replace belts that are worn or damaged.

For applications that require multiple drive belts, replace the belts in matched sets. Replacing only one belt of a matched set will cause the new belt to carry more load because the older belt is stretched. The additional load on the new belt could cause the new belt to break.

If the belts are too loose, vibration causes unnecessary wear on the belts and pulleys. Loose belts may slip enough to cause overheating.

If the belts are too tight, unnecessary stresses are placed on the pulley bearings and on the belts. This may shorten the service life of the components.

Inspect the condition and adjustment of the alternator belts and accessory drive belts (if equipped).

To check the belt tension, apply 110 N (25 lb ft) of force midway between the pulleys. A correctly adjusted belt will deflect 9 mm (0.35 inch) to 15 mm (0.59 inch).

Alternator Belt

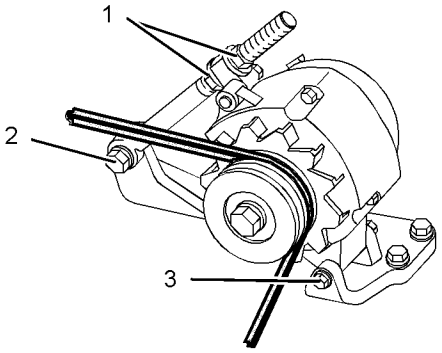

Illustration 66 g01154344

Typical alternator mounting

(1) Adjusting nuts
(2) Mounting bolt
(3) Mounting bolts

1. Slightly loosen mounting bolt (2) and mounting bolt (3). Slightly loosen adjusting nut (1).
2. Move the pulley in order to adjust the belt tension.
3. Tighten the following: adjusting nuts (1), mounting bolt (2) and mounting bolt (3). Refer to the Specifications, SENR3130 for the proper torques.
4. Install the belt guard. Refer to the Specifications, SENR3130 for the proper torques.

If new belts are installed, check the belt tension again after 30 minutes of engine operation at the rated rpm.

Drive Belt for the Air Compressor (If Equipped)

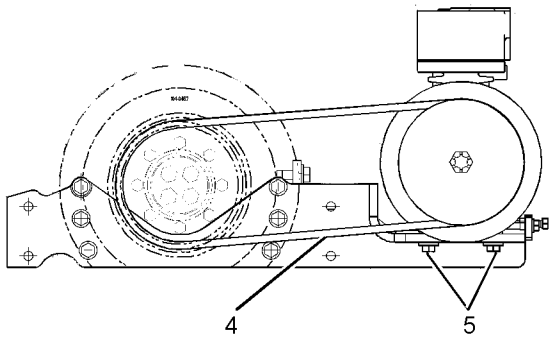

Illustration 67 g01389673

(4) Drive belt for the air compressor
(5) Mounting bolts

Loosen the four mounting bolts from the bracket that holds the air compressor.

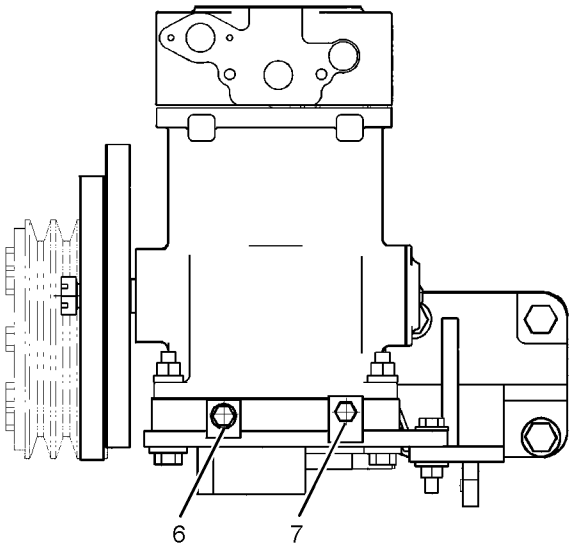

Illustration 68 g01389675

Side view of the air compressor and pulley

(6) Bolt
(7) Adjusting bolt

Loosen bolt 6. Loosen bolt 7. Slide the air compressor closer to the pulley. Remove the old belt. Install a new belt.

Slide the air compressor into position. Tighten bolt 7. Refer to Specification, SENR3130, “Torque Specifications” for the correct torque.

Tension the belt.

Tighten the four mounting bolts (5). Refer to Specification, SENR3130, “Torque Specifications” for the correct torque.

i04322187

Belts - Inspect/Replace
(If Equipped)

SMCS Code: 1397-040; 1397-510

The engine may be equipped with one of the following types of belts and belt tensioners.

Single Belt

The belt on the engine may look like the belt in Illustration 69 or like the belt in Illustration 69 .

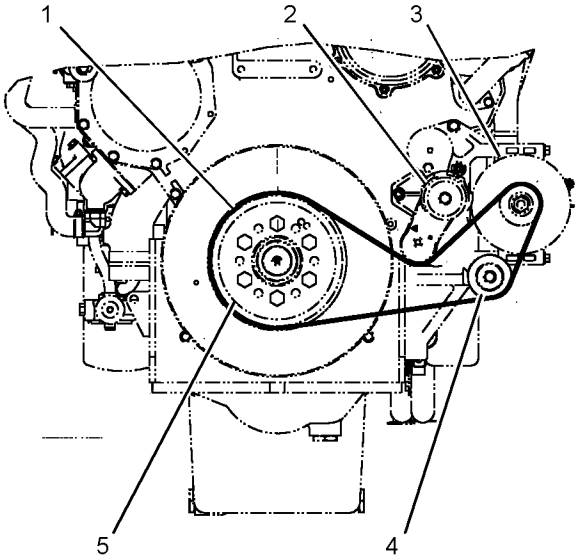

Illustration 69 g02294633

View of the front of a C15 or a C18 Industrial Engine

(1) Belt
(2) Belt tensioner
(3) Alternator
(4) Idler pulley
(5) Crankshaft pulley

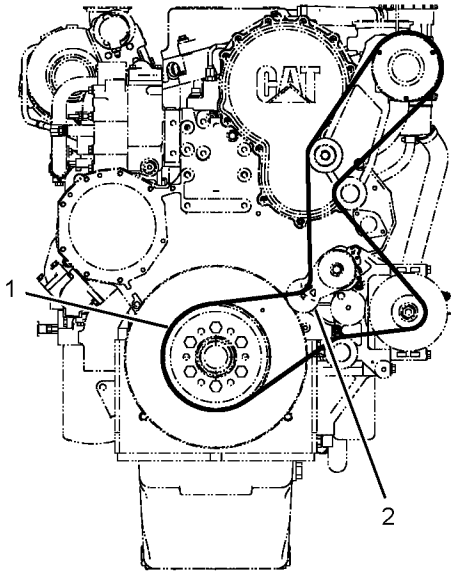

Illustration 70 g02294634

View of the front of a C15 or a C18 Industrial Engine

(1) Belt
(2) Belt tensioner

For maximum engine performance and maximum utilization of your engine, inspect the belts for wear and for cracking. Replace the belts, if necessary.

To replace the belt, perform the following steps:

1. Insert a ratchet with a square drive into the square hole that is located in the tensioner for the belt. Rotate the tensioner clockwise in order to relieve tension on the belt. Remove the belt.

2. Install the new belt correctly, as shown. Be sure that the belt is fully seated on the pulleys. The correct tension will automatically be applied when the ratchet is removed.

Two or More Belts

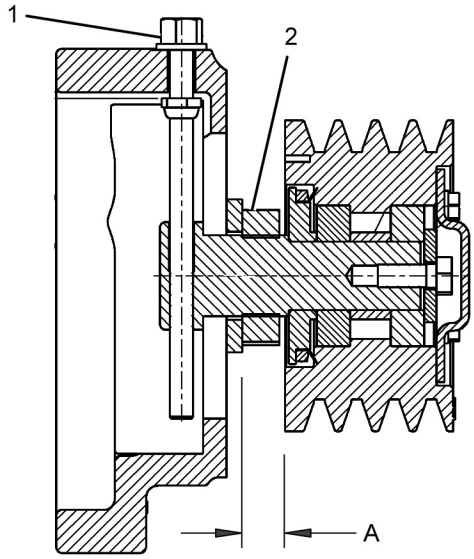

Illustration 71 g02478261

Belt tensioner

(1) Adjustment bolt
(2) 46 mm (1-13/16 inch) jamming locknut (jam nut)
(A) 22 mm (0.87 inch)

Inspection of the Belts

Inspect the fan drive belts for wear and for cracking. Replace the belts if the belts are not in good condition.

Belt Replacement

For applications that require multiple drive belts, replace the drive belts in matched sets. Replacing one drive belt of a matched set will cause the new drive belt to carry more load because the older drive belts are stretched. The additional load on the new drive belt could cause the new drive belt to fail.

Use the following procedure to change the belts.

1. Using a 46 mm (1-13/16 inch) wrench, loosen the jam nut (2).

Note: See figure 71 , dimension (A).

2. Loosen the adjustment bolt (1).

3. Remove the old belt and replace with a new belt. Contact your Cat dealer for assistance in choosing and ordering new belts.

4. Tighten the adjustment bolt (1). Use a 144-0235 Belt Tension Gauge to ensure that belt is tensioned according to table 11 .

5. Tighten the jam nut to a torque of 200 ± 25 N·m (148 ± 18 lb ft)

Table 11

Fan Drive Belt Adjustment	
Belt Tension (Initial)	**Belt Tension (Used)**[1]
801 ± 44 N (180 ± 10 lb)	378 ± 44 N (85 ± 10 lb)

[1] Belt with over 30 minutes of operation at a rated speed

Belt Adjustment

Repeat steps 1, 4, and 5 from the belt replacement procedure.

i03965390

Compression Brake - Inspect/ Adjust/Replace

SMCS Code: 1129-025; 1129-040; 1129-510

Contact your Cat dealer for the proper procedure.

i04156977

Coolant (DEAC) - Change

SMCS Code: 1350-070; 1395-044

Clean the cooling system and flush the cooling system before the recommended maintenance interval if the following conditions exist:

- The engine overheats frequently.
- Foaming is observed.
- The oil has entered the cooling system and the coolant is contaminated.
- The fuel has entered the cooling system and the coolant is contaminated.

NOTICE

Use of commercially available cooling system cleaners may cause damage to cooling system components. Use only cooling system cleaners that are approved for Caterpillar engines.

Note: Inspect the water pump and the water temperature regulator after the cooling system has been drained.

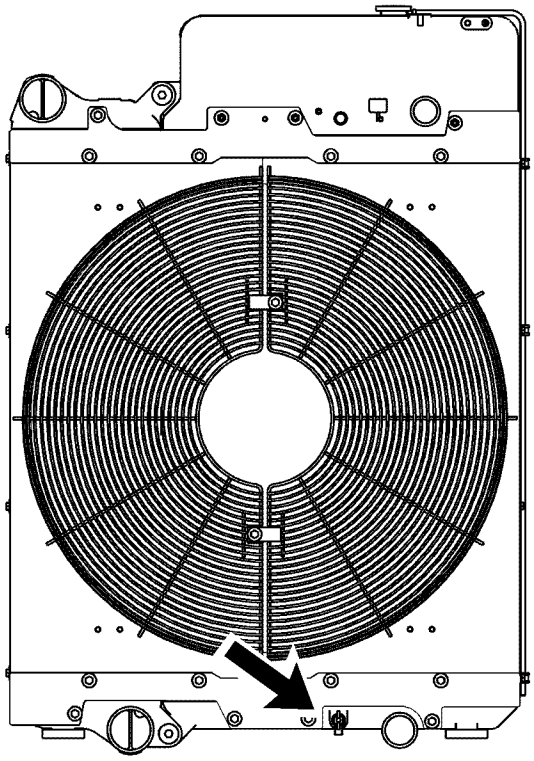

Illustration 72 g02351659

The cooling system drain valve is towards the bottom of the radiator.

Drain

WARNING

Pressurized System: Hot coolant can cause serious burns. To open the cooling system filler cap, stop the engine and wait until the cooling system components are cool. Loosen the cooling system pressure cap slowly in order to relieve the pressure.

NOTICE

Care must be taken to ensure that fluids are contained during performance of inspection, maintenance, testing, adjusting and repair of the product. Be prepared to collect the fluid with suitable containers before opening any compartment or disassembling any component containing fluids.

Refer to Special Publication, NENG2500, “Caterpillar Dealer Service Tool Catalog” or refer to Special Publication, PECJ0003, “Caterpillar Shop Supplies and Tools Catalog” for tools and supplies suitable to collect and contain fluids on Caterpillar products.

Dispose of all fluids according to local regulations and mandates.

1. Stop the engine and allow the engine to cool. Loosen the cooling system filler cap slowly in order to relieve any pressure. Remove the cooling system filler cap.
2. Open the cooling system drain valve.

   Allow the coolant to drain.

NOTICE
Dispose of used engine coolant properly or recycle. Various methods have been proposed to reclaim used coolant for reuse in engine cooling systems. The full distillation procedure is the only method acceptable by Caterpillar to reclaim the used coolant.

For information regarding the disposal and the recycling of used coolant, consult your Cat dealer or consult Cat Dealer Service Tools Group :

Outside Illinois 1-800-542-TOOL
Inside Illinois 1-800-541-TOOL
Canada 1-800-523-TOOL
International 1-309-578-7372

Flush

1. Flush the cooling system with clean water in order to remove any debris.
2. Close the drain valve.

NOTICE
Fill the cooling system no faster than 19 L (5 US gal) per minute to avoid air locks.

3. Fill the cooling system with a mixture of clean water and Cat Fast Acting Cooling System Cleaner. Add 0.5 L (1 pt) of cleaner per 15 L (4 US gal) of the cooling system capacity. Install the cooling system filler cap.
4. Start and run the engine at low idle for a minimum of 30 minutes. The coolant temperature should be at least 82 °C (180 °F).

NOTICE
Improper or incomplete rinsing of the cooling system can result in damage to copper and other metal components.

To avoid damage to the cooling system, make sure to completely flush the cooling system with clear water. Continue to flush the system until all signs of the cleaning agent are gone.

5. Stop the engine and allow the engine to cool. Loosen the cooling system filler cap slowly in order to relieve any pressure. Remove the cooling system filler cap. Open the drain valve. Allow the water to drain. Flush the cooling system with clean water. If equipped, be sure to flush the heater and any related supply and return lines. Close the drain valve.

Cooling Systems with Heavy Deposits or Plugging

Note: For the following procedure to be effective, there must be some active flow through the cooling system components.

1. Flush the cooling system with clean water in order to remove any debris.
2. Close the drain valve.

NOTICE
Fill the cooling system no faster than 19 L (5 US gal) per minute to avoid air locks.

3. Fill the cooling system with a mixture of clean water and Cat Fast Acting Cooling System Cleaner. Add 0.5 L (1 pt) of cleaner per 3.8 to 7.6 L (1 to 2 US gal) of the cooling system capacity. Install the cooling system filler cap.
4. Start and run the engine at low idle for a minimum of 90 minutes. The coolant temperature should be at least 82 °C (180 °F).

NOTICE
Improper or incomplete rinsing of the cooling system can result in damage to copper and other metal components.

To avoid damage to the cooling system, make sure to completely flush the cooling system with clear water. Continue to flush the system until all signs of the cleaning agent are gone.

5. Stop the engine and allow the engine to cool. Loosen the cooling system filler cap slowly in order to relieve any pressure. Remove the cooling system filler cap. Open the drain valve. Allow the water to drain. Flush the cooling system with clean water.

Fill

NOTICE
Fill the cooling system no faster than 19 L (5 US gal) per minute to avoid air locks.

1. Fill the cooling system with coolant/antifreeze. Refer to this Operation and Maintenance Manual, “Fluid Recommendations” topic for more information on cooling system specifications. Do not install the cooling system filler cap.
2. Start and run the engine at low idle. Increase the engine rpm to 1500 rpm. Run the engine at high idle for 1 minute in order to purge the air from the cavities of the engine block. Stop the engine.
3. Check the coolant level. Maintain the coolant level within 13 mm (0.5 inch) below the bottom of the pipe for filling. Maintain the coolant level within 13 mm (0.5 inch) to the proper level on the sight glass.
4. Clean the cooling system filler cap. Inspect the gasket that is on the cooling system filler cap. If the gasket that is on the cooling system filler cap is damaged, discard the old filler cap and install a new filler cap. If the gasket that is on the cooling system filler cap is not damaged, perform a pressure test. A 9S-8140 Pressurizing Pump is used to perform the pressure test. The correct pressure for the cooling system filler cap is stamped on the face of the cooling system filler cap. If the cooling system filler cap does not retain the correct pressure, install a new cooling system filler cap.
5. Start the engine. Inspect the cooling system for leaks and for proper operating temperature.

i04156979

Coolant (ELC) - Change

SMCS Code: 1350-070; 1395-044

Clean the cooling system and flush the cooling system before the recommended maintenance interval if the following conditions exist:

- The engine overheats frequently.
- Foaming is observed.
- The oil has entered the cooling system and the coolant is contaminated.
- The fuel has entered the cooling system and the coolant is contaminated.

Note: When the cooling system is cleaned, only clean water is needed when the ELC is drained and replaced.

Note: Inspect the water pump and the water temperature regulator after the cooling system has been drained.

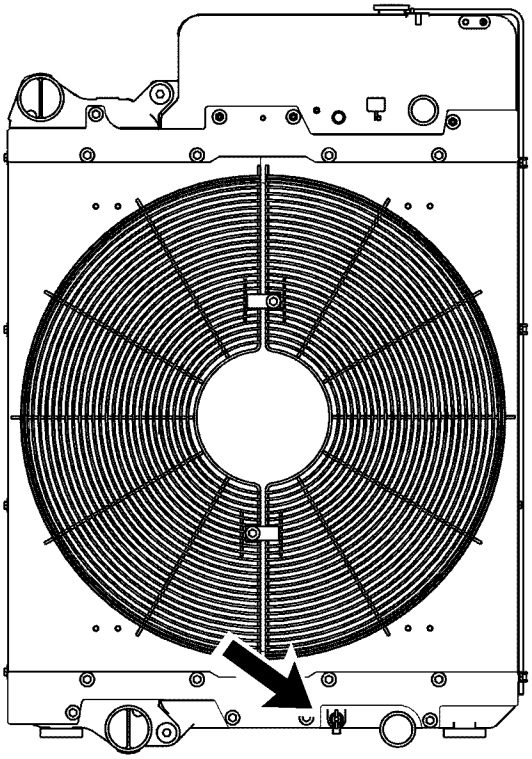

Illustration 73 g02351659

Drain

WARNING

Pressurized System: Hot coolant can cause serious burns. To open the cooling system filler cap, stop the engine and wait until the cooling system components are cool. Loosen the cooling system pressure cap slowly in order to relieve the pressure.

1. Stop the engine and allow the engine to cool. Loosen the cooling system filler cap slowly in order to relieve any pressure. Remove the cooling system filler cap.
2. Open the cooling system drain valve.

   Allow the coolant to drain.

NOTICE
Dispose of used engine coolant properly or recycle. Various methods have been proposed to reclaim used coolant for reuse in engine cooling systems. The full distillation procedure is the only method acceptable by Caterpillar to reclaim the used coolant.

NOTICE
Care must be taken to ensure that fluids are contained during performance of inspection, maintenance, testing, adjusting and repair of the product. Be prepared to collect the fluid with suitable containers before opening any compartment or disassembling any component containing fluids.

Refer to Special Publication, NENG2500, “Caterpillar Dealer Service Tool Catalog” or refer to Special Publication, PECJ0003, “Caterpillar Shop Supplies and Tools Catalog” for tools and supplies suitable to collect and contain fluids on Caterpillar products.

Dispose of all fluids according to local regulations and mandates.

For information regarding the disposal and the recycling of used coolant, consult your Cat dealer or consult Cat Dealer Service Tool Group :

OutsideIllinois 1-800-542-TOOL
InsideIllinois 1-800-541-TOOL
Canada 1-800-523-TOOL
International 1-309-578-7372

Flush

1. Flush the cooling system with clean water in order to remove any debris.
2. Close the drain valve.

NOTICE
Fill the cooling system no faster than 19 L (5 US gal) per minute to avoid air locks.

3. Fill the cooling system with clean water. Install the cooling system filler cap.
4. Start and run the engine at low idle until the temperature reaches49 to 66 °C (120 to 150 °F).
5. Stop the engine and allow the engine to cool. Loosen the cooling system filler cap slowly in order to relieve any pressure. Remove the cooling system filler cap. Open the drain valve. Allow the water to drain. Flush the cooling system with clean water. Close the drain valve.

Fill

NOTICE
Fill the cooling system no faster than 19 L (5 US gal) per minute to avoid air locks.

1. Fill the cooling system with Extended Life Coolant (ELC). Refer to this Operation and Maintenance Manual, “Fluid Recommendations” for more information on cooling system specifications. Do not install the cooling system filler cap.
2. Start and run the engine at low idle. Increase the engine rpm to high idle. Run the engine at high idle for 1 minute in order to purge the air from the cavities of the engine block. Stop the engine.
3. Check the coolant level. Maintain the coolant level within 13 mm (0.5 inch) below the bottom of the pipe for filling. Maintain the coolant level within 13 mm (0.5 inch) to the proper level on the sight glass.
4. Clean the cooling system filler cap. Inspect the gasket that is on the cooling system filler cap. Only install the used filler cap if the gasket is not damaged. Use a 9S-8140 Pressurizing Pump to pressure test a reinstalled cooling system filler cap. The correct pressure for the cooling system filler cap is stamped on the face of the cooling system filler cap. If the cooling system filler cap does not retain the correct pressure, install a new cooling system filler cap.
5. Start the engine. Inspect the cooling system for leaks and for proper operating temperature.

i04745732

Coolant Extender (ELC) - Add

SMCS Code: 1352-544-NL

Cat ELC (Extended Life Coolant) does not require the frequent additions of any supplemental cooling additives which are associated with the present conventional coolants. The Cat ELC Extender will only be added one time.

NOTICE
Use only Cat Extended Life Coolant (ELC) Extender with Cat ELC.

Do NOT use conventional supplemental coolant additive (SCA) with Cat ELC. Mixing Cat ELC with conventional coolants and/or conventional SCA reduces the Cat ELC service life.

Check the cooling system only when the engine is stopped and cool.

WARNING

Personal injury can result from hot coolant, steam and alkali.

At operating temperature, engine coolant is hot and under pressure. The radiator and all lines to heaters or the engine contain hot coolant or steam. Any contact can cause severe burns.

Remove cooling system pressure cap slowly to relieve pressure only when engine is stopped and cooling system pressure cap is cool enough to touch with your bare hand.

Do not attempt to tighten hose connections when the coolant is hot, the hose can come off causing burns.

Cooling System Coolant Additive contains alkali. Avoid contact with skin and eyes.

NOTICE

Care must be taken to ensure that fluids are contained during performance of inspection, maintenance, testing, adjusting, and repair of the product. Be prepared to collect the fluid with suitable containers before opening any compartment or disassembling any component containing fluids.

Refer to Special Publication, NENG2500, “Cat Dealer Service Tool Catalog” or refer to Special Publication, PECJ0003, “Cat Shop Supplies and Tools Catalog” for tools and supplies suitable to collect and contain fluids on Cat products.

Dispose of all fluids according to local regulations and mandates.

1. Loosen the cooling system filler cap slowly in order to relieve pressure. Remove the cooling system filler cap.
2. If necessary, drain enough coolant from the cooling system in order to add the Cat ELC Extender .
3. Add Cat ELC Extender according to the requirements for the cooling system capacity. Refer to this Operation and Maintenance Manual, “Refill Capacities” or to this Operation and Maintenance Manual, “Fluid Recommendations” for more information.
4. Clean the cooling system filler cap. Inspect the gaskets on the cooling system filler cap. Replace the cooling system filler cap if the gaskets are damaged. Install the cooling system filler cap.

i03842450

Coolant Level - Check

SMCS Code: 1395-082

Check the coolant level when the engine is stopped and cool.

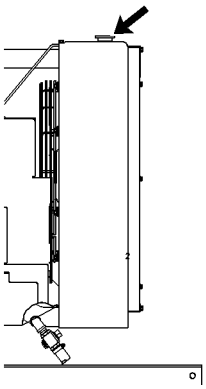

Illustration 74 g00285520

Cooling system filler cap

WARNING

Pressurized System: Hot coolant can cause serious burns. To open the cooling system filler cap, stop the engine and wait until the cooling system components are cool. Loosen the cooling system pressure cap slowly in order to relieve the pressure.

1. Remove the cooling system filler cap slowly in order to relieve pressure.
2. Maintain the coolant level within 13 mm (0.5 inch) of the bottom of the filler pipe. If the engine is equipped with a sight glass, maintain the coolant level to the proper level in the sight glass.

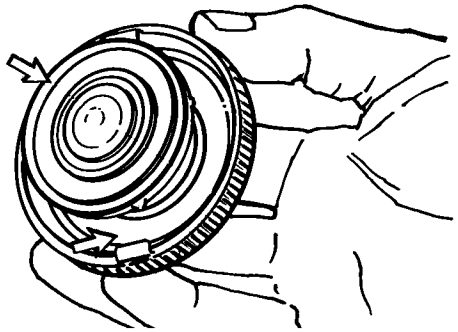

Illustration 75 g00103639
Typical filler cap gaskets

3. Clean the cooling system filler cap and check the condition of the filler cap gaskets. Replace the cooling system filler cap if the filler cap gaskets are damaged. Reinstall the cooling system filler cap.

4. Inspect the cooling system for leaks.

i04134625

Coolant Sample (Level 1) - Obtain

SMCS Code: 1350-008; 1395-008; 1395-554; 7542

Note: Obtaining a Coolant Sample (Level 1) is optional if the cooling system is filled with Cat ELC (Extended Life Coolant).

Note: Obtain a Coolant Sample (Level 1) if the cooling system is filled with any other coolant instead of Cat ELC including the following:

- Commercial long life coolants that meet the Caterpillar Engine Coolant Specification -1 (Caterpillar EC-1)
- Cat DEAC (Diesel Engine Antifreeze/Coolant)
- Commercial heavy-duty coolant/antifreeze

Table 12

Recommended Interval		
Type of Coolant	**Level 1**	**Level 2**
Cat DEAC or any coolant other than Cat ELC	Every 500 Hours(1)	Yearly(2)
Cat ELC	Optional	Yearly(2)

(continued)

(Table 12, contd)

(1) This interval is the recommended interval for coolant samples for all conventional heavy-duty coolant/antifreeze. This interval is also the recommended interval for coolant samples of commercial coolants that meet the Cat EC-1 specification for engine coolant.

(2) The Level 2 Coolant Analysis should be performed sooner if a problem is suspected or identified.

NOTICE

Always use a designated pump for oil sampling, and use a separate designated pump for coolant sampling. Using the same pump for both types of samples may contaminate the samples that are being drawn. This contaminate may cause a false analysis and an incorrect interpretation that could lead to concerns by both dealers and customers.

Note: Level 1 results may indicate a need for Level 2 Analysis.

Obtain the sample of the coolant as close as possible to the recommended sampling interval. In order to receive the full effect of S·O·S analysis, establish a consistent trend of data. In order to establish a pertinent history of data, perform consistent samplings that are evenly spaced. Supplies for collecting samples can be obtained from your Cat dealer.

Use the following guidelines for proper sampling of the coolant:

- Complete the information on the label for the sampling bottle before you begin to take the samples.
- Keep the unused sampling bottles stored in plastic bags.
- Obtain coolant samples directly from the coolant sample port. You should not obtain the samples from any other location.
- Keep the lids on empty sampling bottles until you are ready to collect the sample.
- Place the sample in the mailing tube immediately after obtaining the sample in order to avoid contamination.
- Never collect samples from expansion bottles.
- Never collect samples from the drain for a system.

Submit the sample for Level 1 analysis.

For additional information about coolant analysis, see this Operation and Maintenance Manual, “Fluid Recommendations” or consult your Cat dealer.

i05378320

Coolant Sample (Level 2) - Obtain

SMCS Code: 1350-008; 1395-008; 1395-554; 7542

NOTICE
Always use a designated pump for oil sampling, and use a separate designated pump for coolant sampling. Using the same pump for both types of samples may contaminate the samples that are being drawn. This contaminate may cause a false analysis and an incorrect interpretation that could lead to concerns by both dealers and customers.

NOTICE
Care must be taken to ensure that fluids are contained during performance of inspection, maintenance, testing, adjusting, and repair of the product. Be prepared to collect the fluid with suitable containers before opening any compartment or disassembling any component containing fluids.

Refer to Special Publication, NENG2500, “Cat Dealer Service Tool Catalog” or refer to Special Publication, PECJ0003, “Cat Shop Supplies and Tools Catalog” for tools and supplies suitable to collect and contain fluids on Cat products.

Dispose of all fluids according to local regulations and mandates.

Refer to Operation and Maintenance Manual, “Cooling System Coolant Sample (Level 1) - Obtain” for the guidelines for a proper sampling of the coolant.

Submit the sample for Level 2 analysis.

For additional information about coolant analysis, see Special Publication, SEBU7003, “Cat 3600 Series and C280 Series Diesel Engine Fluids Recommendations” or consult your Cat dealer.

i04269112

Cooling System Supplemental Coolant Additive (SCA) - Test/ Add

(Systems Which are Filled with Conventional Coolant)

SMCS Code: 1352-045; 1395-081

This maintenance procedure is required for conventional coolants such as DEAC.**Do not perform this maintenance for cooling systems that are filled with Cat Extended Life Coolant (Cat ELC) or Cat Extended Life Inhibitor (Cat ELI).**

WARNING

Cooling system coolant additive contains alkali. To help prevent personal injury, avoid contact with the skin and eyes. Do not drink cooling system coolant additive.

NOTICE
Excessive supplemental coolant additive concentration can form deposits on the higher temperature surfaces of the cooling system, reducing the engine's heat transfer characteristics. Reduced heat transfer could cause cracking of the cylinder head and other high temperature components.

Excessive supplemental coolant additive concentration could also result in blockage of the heat exchanger, overheating, and/or accelerated wear of the water pump seal.

Do not exceed the recommended amount of supplemental coolant additive concentration.

NOTICE
Do NOT mix brands or types of SCA. Do NOT mix SCAs and extenders.

Failure to follow the recommendations can result in shortened cooling system component life.

NOTICE
Use Only Approved SCAs. Conventional coolants require the maintenance addition of SCA throughout their expected life. Do NOT use an SCA with a coolant unless specifically approved by the coolant supplier for use with their coolant. It is the responsibility of the coolant manufacturer to ensure compatibility and acceptable performance.

Failure to follow the recommendations can result in shortened cooling system component life.

NOTICE
Care must be taken to ensure that fluids are contained during performance of inspection, maintenance, testing, adjusting, and repair of the product. Be prepared to collect the fluid with suitable containers before opening any compartment or disassembling any component containing fluids.

Refer to Special Publication, NENG2500, “Cat Dealer Service Tool Catalog” and to Special Publication, GECJ0003, “Cat Shop Supplies and Tools” for tools and supplies suitable to collect and contain fluids on Cat products.

Dispose of all fluids according to applicable regulations and mandates.

Note: Caterpillar recommends that an S·O·S Coolant Analysis (Level 1) be performed to check the concentration of SCA.

Maintain the Proper Concentration of SCA in the Coolant

WARNING

Pressurized System: Hot coolant can cause serious burns. To open the cooling system filler cap, stop the engine and wait until the cooling system components are cool. Loosen the cooling system pressure cap slowly in order to relieve the pressure.

1. Remove the cooling system filler cap slowly.

2. Test the concentration of the SCA with a 286 - 2578 Nitrite Test Strip or review the results of the S·O·S Coolant Analysis (Level 1).

3. If necessary, drain some coolant in order to allow space for the addition of the SCA.

4. Add the amount of SCA required to maintain a concentration of 3 percent to 6 percent SCA in the coolant.

5. Clean the cooling system filler cap. Install the cooling system filler cap.

For further information, refer to Special Publication, SEBU6251, “Cat Commercial Diesel Engine Fluids Recommendations”.

i05698174

DEF Filler Screen - Clean

SMCS Code: 108K-070-Z3

NOTICE
Ensure that the engine is stopped before any servicing or repair is performed.

NOTICE
Care must be taken to ensure that fluids are contained during performance of inspection, maintenance, testing, adjusting, and repair of the product. Be prepared to collect the fluid with suitable containers before opening any compartment or disassembling any component containing fluids.

Refer to Special Publication, NENG2500, “Cat Dealer Service Tool Catalog” or refer to Special Publication, PECJ0003, “Cat Shop Supplies and Tools Catalog” for tools and supplies suitable to collect and contain fluids on Cat products.

Dispose of all fluids according to local regulations and mandates.

The filler neck adapter filter screen in the diesel exhaust fluid tank will need to be cleaned or replaced if contaminated.

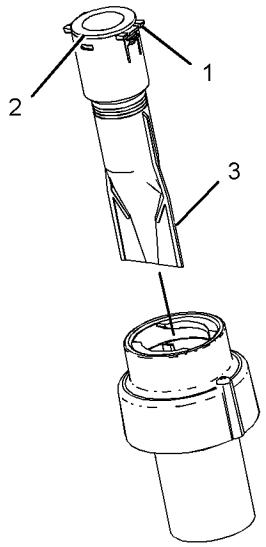

Illustration 76 g03618438

1. Use a screwdriver or pick to press the tabs (1).

2. Pull the screen assembly (2) upward from both sides and remove from the fill neck adapter

3. Use water or compressed air to clean out the filter screen (3). If there is any debris inside, let dry and remove the debris by turning the screen upside down and dumping debris out. If the debris cannot be removed or the filter screen is damaged, replace the filler neck adapter filter screen.

i05764171

DEF Filter (Sock) - Replace

SMCS Code: 108K-510-FI

NOTICE
Ensure that the engine is stopped before any servicing or repair is performed.

NOTICE
Care must be taken to ensure that fluids are contained during performance of inspection, maintenance, testing, adjusting, and repair of the product. Be prepared to collect the fluid with suitable containers before opening any compartment or disassembling any component containing fluids.

Refer to Special Publication, NENG2500, “Cat Dealer Service Tool Catalog” or refer to Special Publication, PECJ0003, “Cat Shop Supplies and Tools Catalog” for tools and supplies suitable to collect and contain fluids on Cat products.

Dispose of all fluids according to local regulations and mandates.

Note: Refer to Special Instruction, REHS8231, “Removal Procedures for Diesel Exhaust Fluid (DEF) Connectors” for the correct removal procedure of hose assemblies (1) and (5).

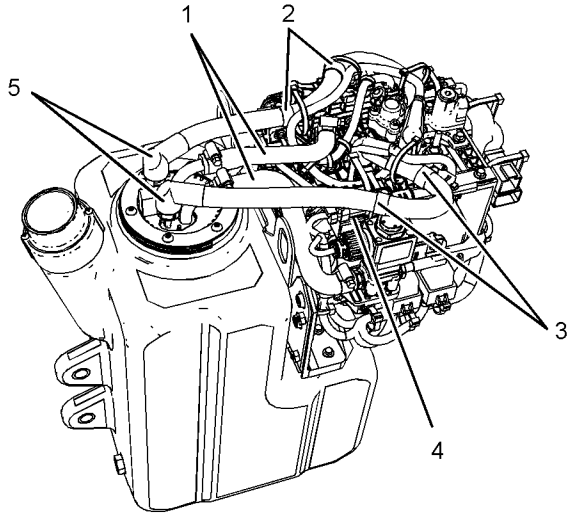

Illustration 77 g03662693

1. Clamp off hoses (1).

2. Remove clips (2) and (3). Disconnect harness assemblies (4). Remove hose assemblies (1) and (5).

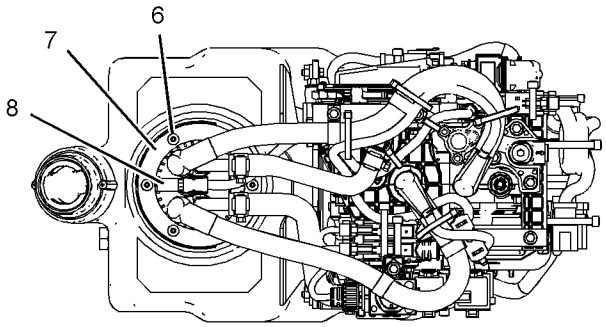

Illustration 78 g03665701

3. Remove bolts (6), plate (7), tank header (8), and gasket (not shown).

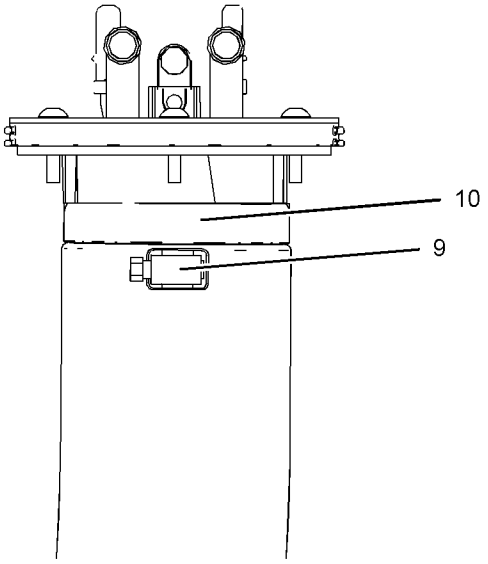

Illustration 79 g03665737

4. Unscrew the band clamp (9) and remove the band clamp from the filter base (10).

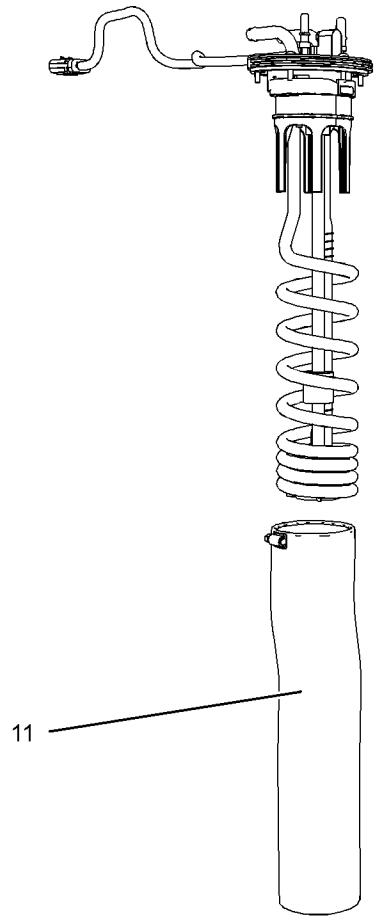

Illustration 80 g03664911

5. Remove the filter sock (11) from the filter base.

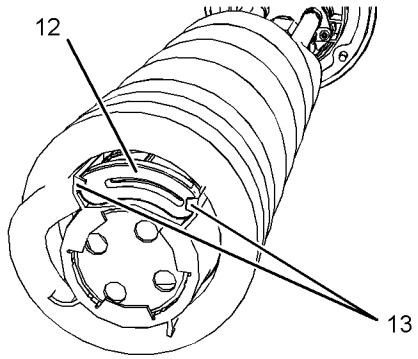

Illustration 81 g03666075

6. Remove the suction filter (12) at the bottom of the header coils by pulling tabs (13). Replace with a new suction filter.

7. Install new filter sock by pulling filter sock over the header coils up to the bottom of the assembled filter base.

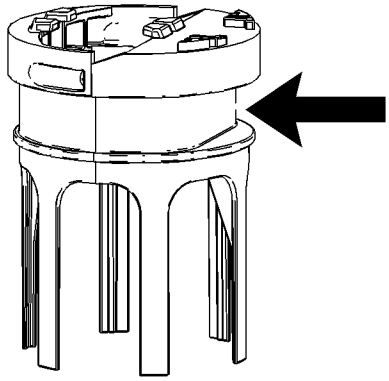

Illustration 82 g03665754

8. Tighten the band clamp 4.5 ± 0.7 N·m (40 ± 6 lb in) , ensuring that the band clamp is aligned, as shown in illustration 82 , to the flat spot on the base. Ensure that the sock filter does not bunch when tightening the band clamp.

9. Install the tank header following steps 3 through 5 in reverse order with a new gasket.

10. Tighten bolts (6) in an alternating sequence to 5 ± 1 N·m (44 ± 9 lb in). Tighten bolts (6) a second time in an alternating sequence to 5 ± 1 N·m (44 ± 9 lb in). Apply rubber lubricant to the o-ring seal inside of hose assemblies (1).

i05379743

Diesel Exhaust Fluid - Fill

SMCS Code: 108K-544

NOTICE

Care must be taken to ensure that fluids are contained during performance of inspection, maintenance, testing, adjusting, and repair of the machine. Be prepared to collect the fluid with suitable containers before opening any compartment or disassembling any component containing fluids.

Dispose of all fluids according to local regulations and mandates.

Reference: See Operation and Maintenance Manual, “Capacities (Refill)” for the capacity of the Diesel Exhaust Fluid (DEF) tank for your engine.

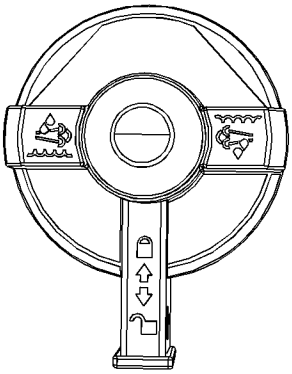

Illustration 83 g03379943
DEF Tank Filler Cap

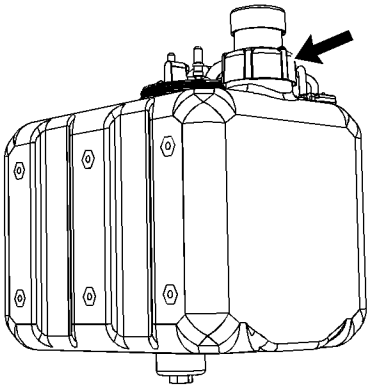

Illustration 84 g03404164

1. Clean blue DEF tank filler cap (1) and the surrounding area.

2. Remove the blue DEF tank filler cap.

3. Fill the tank with diesel exhaust fluid (DEF).

Note: Do not fill the DEF tank from a contaminated container or funnel.

Note: Do not over fill the tank. DEF can freeze and needs room for expansion.

4. Install the blue DEF tank filler cap.

Refer to Operation and Maintenance Manual, “Lubricant Viscosities” for more information on diesel exhaust fluid (DEF) guidelines.

i05806161

Diesel Exhaust Fluid Filter - Replace

SMCS Code: 108K-510-FI

The Diesel Exhaust Fluid (DEF) filter is located on the DEF tank. The DEF tank is located in the tool box on the right side of the machine.

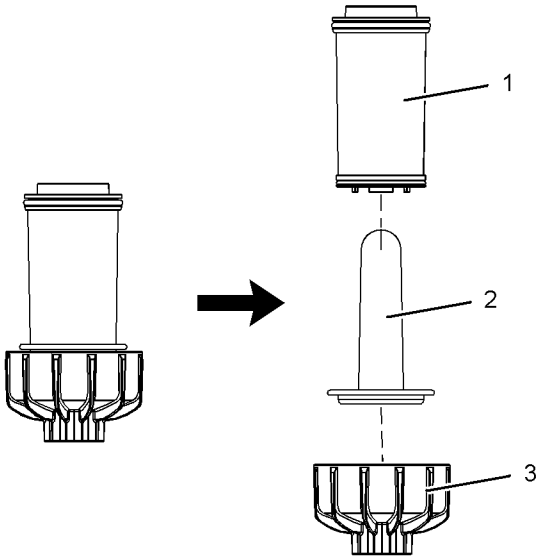

Illustration 85 g03332612
Typical Example

NOTICE
Ensure that the engine is stopped before any servicing or repair is performed.

NOTICE
Care must be taken to ensure that fluids are contained during performance of inspection, maintenance, testing, adjusting, and repair of the product. Be prepared to collect the fluid with suitable containers before opening any compartment or disassembling any component containing fluids.

Refer to Special Publication, NENG2500, “Cat Dealer Service Tool Catalog” or refer to Special Publication, PECJ0003, “Cat Shop Supplies and Tools Catalog” for tools and supplies suitable to collect and contain fluids on Cat products.

Dispose of all fluids according to local regulations and mandates.

1. Remove the diesel exhaust fluid (DEF) filter cap (3) with a 27 mm (1.06 inch) wrench.

2. Remove the rubber cone insert (2) from the DEF filter (1).

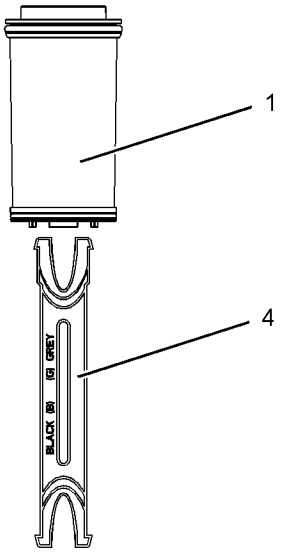

Illustration 86 g03332637

Typical Example

3. Insert the DEF filter removal tool (4) into the DEF filter (1) and remove the DEF filter (1).

Note: Wear gloves when you handle the DEF filter removal tool (4).

4. Clean the area around the filter housing.

5. Apply a thin coat of 207-1601 Lubricant to the seals of the new DEF filter (1).

6. Install new DEF filter (1) and rubber cone insert. Torque the filter to 20 ± 5 N·m (14.8 ± 3.7 lb ft) with a 27 mm (1.06 inch) wrench.

i05400525

Diesel Particulate Filter - Clean

SMCS Code: 108F-070

Consult your Cat dealer when the DPF needs to be cleaned.

The approved Caterpillar DPF maintenance procedure requires that one of the following actions be taken when the DPF needs to be cleaned:

- The DPF from your engine can be replaced with a new DPF
- The DPF from your engine can be replaced with a remanufactured DPF
- The DPF from your engine can be cleaned by your local authorized Cat dealer, or a Caterpillar approved DPF cleaning machine, and reinstalled

Note: In order to maintain emissions documentation, the DPF that is removed from the engine when the DPF is cleaned must be reinstalled on the same engine.

Note: A specific ash service regeneration must be performed before removing a DPF that will be cleaned. All three scenarios listed above require a reset of the ash monitoring system in the engine ECM.

i00934883

Driven Equipment - Check

SMCS Code: 3279-535

Check the Alignment

To minimize bearing problems and vibration of the engine crankshaft and the driven equipment, the alignment between the engine and driven equipment must be properly maintained.

Check the alignment according to the instructions that are provided by the following manufacturers:

- Caterpillar
- OEM of the drive coupling
- OEM of the driven equipment

Torque all of the fasteners to the proper specifications.

Inspect the Drive Coupling

Inspect the drive coupling according to the instructions that are provided by the OEM of the coupling. For the following service information, see the literature that is provided by the OEM of the coupling:

- Lubrication requirements
- Specifications for the end play
- “Reusability Guidelines”
- Replacement instructions

Inspect the Rear Gear Train

Inspect the crankshaft gear. If excessive wear is found, replace the crankshaft gear and the large cluster idler.

If any gear causes damage to other gears through failure, replace the entire rear gear train.

For the correct parts, see the Parts Manual for the engine. For removal and replacement instructions, see the Service Manual, “Disassembly and Assembly” module. Consult your Caterpillar dealer for assistance.

i01646701

Engine - Clean

SMCS Code: 1000-070

WARNING

Personal injury or death can result from high voltage.

Moisture can create paths of electrical conductivity.

Make sure that the electrical system is OFF. Lock out the starting controls and tag the controls “DO NOT OPERATE” .

NOTICE
Accumulated grease and oil on an engine is a fire hazard. Keep the engine clean. Remove debris and fluid spills whenever a significant quantity accumulates on the engine.

Periodic cleaning of the engine is recommended. Steam cleaning the engine will remove accumulated oil and grease. A clean engine provides the following benefits:

- Easy detection of fluid leaks
- Maximum heat transfer characteristics
- Ease of maintenance

Note: Caution must be used in order to prevent electrical components from being damaged by excessive water when you clean the engine. Avoid electrical components such as the alternator, the starter, and the ECM.

i04134990

Engine Air Cleaner Element (Dual Element/Box Type) - Replace

SMCS Code: 1054-510

Primary Filter

NOTICE
Service the primary filter element only when the alert indicator for the intake air filter is flashing. Do not open the filter compartment unless it is time for service. Opening the filter compartment can cause dirt to get into the clean side of the filter housing.

NOTICE
Extremely short air filter life can result if the precleaner system malfunctions. If air filter life is drastically reduced from typical for the operating conditions, consult your Caterpillar Dealer. The exhaust system dust ejector for the strata tube precleaner must pull a minimum vacuum of 508 mm (20 inch) of water.

NOTICE
Service the engine air filters with the engine stopped. Engine damage could result.

NOTICE
Do not use the filter for longer than one year.

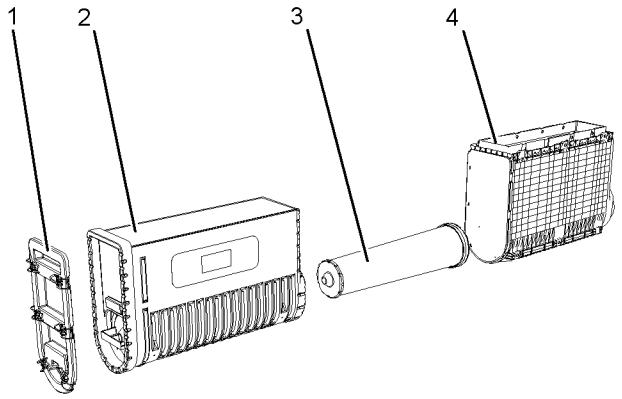

Illustration 87 g02105115

1. Remove the air cleaner cover (1). Pull out in order to remove the element.

2. Remove the primary filter element (2) from the air cleaner housing (4).

3. Mark the secondary filter element (3) in order to show that the primary filter element has been serviced. The secondary filter element should be replaced when the primary filter element is serviced for the third time. Refer to the section “Secondary Filter”.

4. Clean the inside of the air cleaner housing (4). Keep the secondary filter element in place while you clean the housing.

5. Install a new primary air filter. Push the filter element firmly in order to properly seat the element. Write the date on the element, if the primary element is replaced.

6. Install the air cleaner cover.

Secondary Filter

NOTICE
Always replace the secondary filter element. Never attempt to reuse the filter by cleaning.

The secondary filter element should be replaced at the time the primary element is serviced for the third time.

NOTICE
The filter should be kept in service for no longer than 1 year.

NOTICE
Always leave the secondary filter element in place while you clean the air cleaner housing.

1. Open the engine access door.

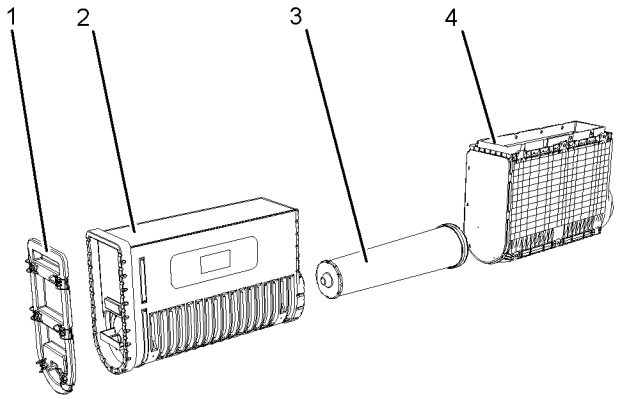

Illustration 88 g02105115

2. Remove the air cleaner housing cover (1).

3. Remove the primary filter element (2). Refer to the section “Primary Filter”.

4. Clean the inside of the air cleaner housing (4).

5. Remove the secondary filter element (3). Pull out in order to remove the element.

6. Install a new secondary filter element. Push the element firmly in order to properly seat the element. Write the date on the element, if the element is replaced.

7. Install the primary filter element and the air cleaner housing cover.

i04775542

Engine Air Cleaner Element (Dual Element/Canister Type) - Clean/Replace
(If Equipped)

SMCS Code: 1054-070; 1054-510

NOTICE
Never run the engine without an air cleaner element installed. Never run the engine with a damaged air cleaner element. Do not use air cleaner elements with damaged pleats, gaskets or seals. Dirt entering the engine causes premature wear and damage to engine components. Air cleaner elements help to prevent airborne debris from entering the air inlet.

NOTICE
Never service the air cleaner element with the engine running since this will allow dirt to enter the engine.

Servicing the Air Cleaner Elements

If the air cleaner element becomes plugged, the air can split the material of the air cleaner element. Unfiltered air will drastically accelerate internal engine wear. Your Cat dealer has the proper air cleaner elements for your application. Consult your Cat dealer for the correct air cleaner element.

- Check the precleaner (if equipped) daily for accumulation of dirt and debris. Remove any dirt and debris, as needed.
- Operating conditions (dust, dirt, and debris) may require more frequent service of the air cleaner element.
- The air cleaner element may be cleaned up to six times if the element has been properly cleaned and inspected.
- The air cleaner element should be replaced at least one time per year. This replacement should be performed regardless of the number of cleanings.

Replace the dirty paper air cleaner elements with clean air cleaner elements. Before installation, check the air cleaner elements thoroughly for tears and/or holes in the filter material. Inspect the gasket or the seal of the air cleaner element for damage. Maintain a supply of suitable air cleaner elements for replacement purposes.

Dual Element Air Cleaners

The dual element air cleaner contains a primary air cleaner element and a secondary air cleaner element. The primary air cleaner element can be used up to six times if the element has been properly cleaned and inspected. The primary air cleaner element should be replaced at least one time per year. This replacement should be performed regardless of the number of cleanings.

The secondary air cleaner element is not serviceable or washable. The secondary air cleaner element should be removed and discarded for every three cleanings of the primary air cleaner element. When the engine is operating in environments that are dusty or dirty, air cleaner elements may require more frequent replacement.

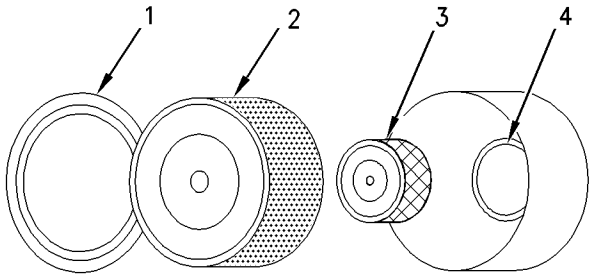

Illustration 89 g00736431

(1) Cover
(2) Primary air cleaner element
(3) Secondary air cleaner element
(4) Air inlet for the turbocharger

1. Remove the cover. Remove the primary air cleaner element.
2. The secondary air cleaner element should be removed and discarded for every three cleanings of the primary air cleaner element.

Note: Refer to “Cleaning the Primary Air Cleaner Elements”.

3. Cover the air inlet to the turbocharger with tape in order to keep out dirt.
4. Clean the inside of the air cleaner cover and body with a clean, dry cloth.
5. Remove the tape from the air inlet of the turbocharger. Install the secondary air cleaner element. Install a primary air cleaner element that is new or cleaned.
6. Install the air cleaner cover.
7. Reset the air cleaner service indicator.

Cleaning the Primary Air Cleaner Elements

NOTICE
Caterpillar recommends certified air filter cleaning services that are available at Cat dealers. The Cat cleaning process uses proven procedures to assure consistent quality and sufficient filter life.

Observe the following guidelines if you attempt to clean the filter element:

Do not tap or strike the filter element in order to remove dust.

Do not wash the filter element.

Use low pressure compressed air in order to remove the dust from the filter element. Air pressure must not exceed 207 kPa (30 psi). Direct the air flow up the pleats and down the pleats from the inside of the filter element. Take extreme care in order to avoid damage to the pleats.

Do not use air filters with damaged pleats, gaskets, or seals. Dirt entering the engine will cause damage to engine components.

The primary air cleaner element can be used up to six times if the element has been properly cleaned and inspected. When the primary air cleaner element is cleaned, check for rips or tears in the filter material. The primary air cleaner element should be replaced at least one time per year. This replacement should be performed regardless of the number of cleanings.

Use clean primary air cleaner elements while dirty elements are being cleaned.

NOTICE
Do not clean the air cleaner elements by bumping or tapping. This could damage the seals. Do not use elements with damaged pleats, gaskets or seals. Damaged elements will allow dirt to pass through. Engine damage could result.

Visually inspect the primary air cleaner elements before cleaning. Inspect the air cleaner elements for damage to the seal, the gaskets, and the outer cover. Discard any damaged air cleaner elements.

There are two common methods that are used to clean primary air cleaner elements:

- Pressurized air
- Vacuum cleaning

Pressurized Air

Pressurized air can be used to clean primary air cleaner elements that have not been cleaned more than two times. Pressurized air will not remove deposits of carbon and oil. Use filtered, dry air with a maximum pressure of 207 kPa (30 psi).

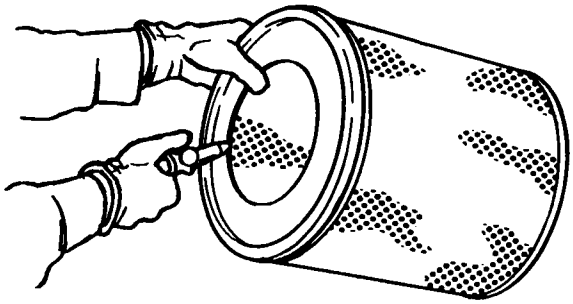

Illustration 90 g00281692

Note: When the primary air cleaner elements are cleaned, always begin with the clean side (inside) in order to force dirt particles toward the dirty side (outside).

Aim the hose so that the air flows inside the element along the length of the filter to prevent damage to the paper pleats. Do not aim the stream of air directly at the primary air cleaner element. Dirt could be forced further into the pleats.

Note: Refer to “Inspecting the Primary Air Cleaner Elements”.

Vacuum Cleaning

Vacuum cleaning is a good method for cleaning primary air cleaner elements which require daily cleaning because of a dry, dusty environment. Cleaning with pressurized air is recommended prior to vacuum cleaning. Vacuum cleaning will not remove deposits of carbon and oil.

Note: Refer to “Inspecting the Primary Air Cleaner Elements”.

Inspecting the Primary Air Cleaner Elements

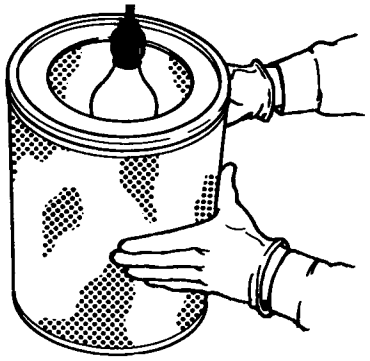

Illustration 91 g00281693

Inspect the clean, dry primary air cleaner element. Use a 60w blue light in a dark room or in a similar facility. Place the blue light in the primary air cleaner element. Rotate the primary air cleaner element. Inspect the primary air cleaner element for tears and/or holes. Inspect the primary air cleaner element for light that may show through the filter material. To confirm the result, compare the primary air cleaner element to a new air cleaner element that has the same part number.

Do not use a primary air cleaner element that has any tears and/or holes in the filter material. Do not use a primary air cleaner element with damaged pleats, gaskets, or seals. Discard damaged primary air cleaner elements.

Storing Primary Air Cleaner Elements

If a primary air cleaner element that passes inspection will not be used, the primary air cleaner element can be stored for future use.

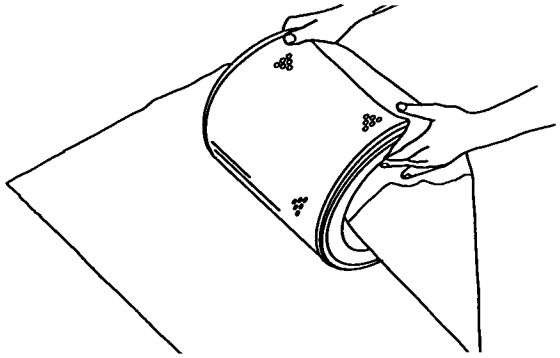

Illustration 92 g00281694

Do not use paint, a waterproof cover, or plastic as a protective covering for storage. An air flow restriction may result. To protect against dirt and damage, wrap the primary air cleaner elements in Volatile Corrosion Inhibited (VCI) paper.

Place the primary air cleaner element into a box for storage. For identification, mark the outside of the box and mark the primary air cleaner element. Include the following information:

- Date of cleaning
- Number of cleanings

Store the box in a dry location.

i04281531

Engine Air Cleaner Element (Single Element/Canister Type) - Clean/Replace
(If Equipped)

SMCS Code: 1054-070; 1054-510

NOTICE
Never run the engine without an air cleaner element installed. Never run the engine with a damaged air cleaner element. Do not use air cleaner elements with damaged pleats, gaskets or seals. Dirt entering the engine causes premature wear and damage to engine components. Air cleaner elements help to prevent airborne debris from entering the air inlet.

NOTICE
Never service the air cleaner element with the engine running since this will allow dirt to enter the engine.

Note: Use of a platform may be necessary to reach the air cleaner element.

Clean the air cleaner elements or replace the air cleaner elements when the following conditions occur:

- Inspect the air cleaner elements before the air filter restriction reaches 2.5 kPa (10 inches of H_2O). A loss of engine performance may occur when the air filter restriction exceeds this limit.
- The air cleaner elements must be cleaned or replaced before the air filter restriction exceeds 3.75 kPa (15 inches of H_2O).

Note: The air filter restriction is measured before the air inlet to the turbocharger compressor.

Servicing the Air Cleaner Elements

Note: If the air cleaner is not manufactured by Caterpillar, follow the instructions that are provided by the OEM of the air cleaner.

If the air cleaner element becomes plugged, the air can split the material of the air cleaner element. Unfiltered air will drastically accelerate internal engine wear. Your Caterpillar dealer has the proper air cleaner elements for your application. Consult your Caterpillar dealer for the correct air cleaner element.

- Check the precleaner (if equipped) daily for accumulation of dirt and debris. Remove any dirt and debris, as needed.

Replace the dirty paper air cleaner elements with clean air cleaner elements. Before installation, thoroughly inspect the air cleaner elements for tears and/or holes in the filter material. Inspect the gasket or the seal of the air cleaner element for damage. Maintain a supply of suitable air cleaner elements for replacement purposes.

1. Remove the air cleaner cover. Remove the air cleaner element.

2. Cover the air inlet to the turbocharger with tape in order to keep dirt out.

3. Clean the inside of the air cleaner cover and body with a clean, dry cloth.

4. Remove the tape for the air inlet to the turbocharger. Install an air cleaner element that is new or cleaned.

5. Install the air cleaner cover.

Inspecting Air Cleaner Elements

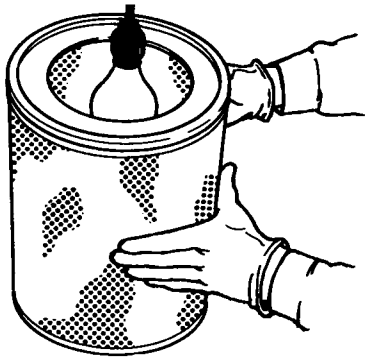

Illustration 93 g00281693

Inspect the clean, dry air cleaner element. Use a 60 watt blue light in a dark room or in a similar facility. Place the blue light in the element. Rotate the element. Inspect the element for tears and/or holes. Inspect the element for light that may show through the filter material. If it is necessary in order to confirm the result, compare the element to a new element that has the same part number.

Do not use an element that has any tears and/or holes in the filter material. Do not use an element with damaged pleats, gaskets or seals. Discard damaged elements.

Storing Air Cleaner Elements

If an element that passes inspection will not be used, the element can be stored for future use.

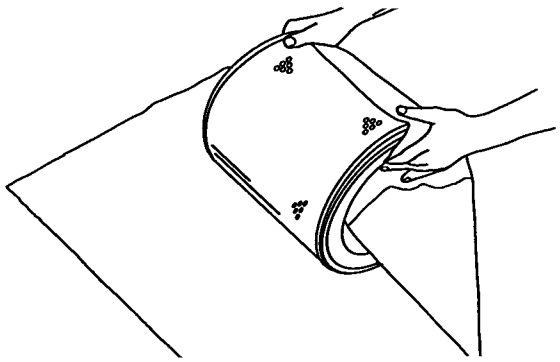

Illustration 94 g00281694

Do not use paint, a waterproof cover, or plastic as a protective covering for storage. Restricted air flow may result. To protect against dirt and damage, wrap the elements in Volatile Corrosion Inhibited (VCI) paper.

Place the element into a box for storage. For identification, mark the outside of the box.

Store the box in a dry location.

i01900118

Engine Air Cleaner Service Indicator - Inspect
(If Equipped)

SMCS Code: 7452-040

Some engines may be equipped with a different service indicator.

Some engines are equipped with a differential gauge for inlet air pressure. The differential gauge for inlet air pressure displays the difference in the pressure that is measured before the air cleaner element and the pressure that is measured after the air cleaner element. As the air cleaner element becomes dirty, the pressure differential rises. If your engine is equipped with a different type of service indicator, follow the OEM recommendations in order to service the air cleaner service indicator.

The service indicator may be mounted on the air cleaner housing or in a remote location.

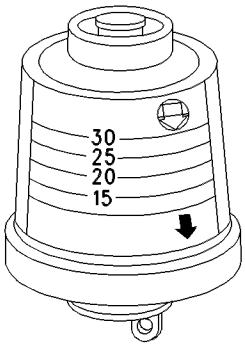

Illustration 95 g00103777
Typical service indicator

Observe the service indicator. The air cleaner element should be cleaned or the air cleaner element should be replaced when one of the following conditions occur:

- The yellow diaphragm enters the red zone.
- The red piston locks in the visible position.

Test the Service Indicator

Service indicators are important instruments.

- Check for ease of resetting. The service indicator should reset in less than three pushes.
- Check the movement of the yellow core when the engine is accelerated to the engine rated speed. The yellow core should latch approximately at the greatest vacuum that is attained.

If the service indicator does not reset easily, or if the yellow core does not latch at the greatest vacuum, the service indicator should be replaced. If the new service indicator will not reset, the hole for the service indicator may be plugged.

The service indicator may need to be replaced frequently in environments that are severely dusty, if necessary. Replace the service indicator annually regardless of the operating conditions. Replace the service indicator when the engine is overhauled, and whenever major engine components are replaced.

Note: When a new service indicator is installed, excessive force may crack the top of the service indicator. Tighten the service indicator to a torque of 2 N·m (18 lb in).

i02436689

Engine Mounts - Inspect

SMCS Code: 1152-040; 1152

Inspect the engine mounts for deterioration and for proper bolt torque. Engine vibration can be caused by the following conditions:

- Improper mounting of the engine
- Deterioration of the engine mounts
- Loose mounting bolts

Any engine mount that shows deterioration should be replaced. Refer to the Specifications Manual, SENR3130, “Torque Specifications”. Refer to your Caterpillar dealer for more information.

i04288290

Engine Oil Level - Check

SMCS Code: 1348-535-FLV

WARNING

Hot oil and hot components can cause personal injury. Do not allow hot oil or hot components to contact the skin.

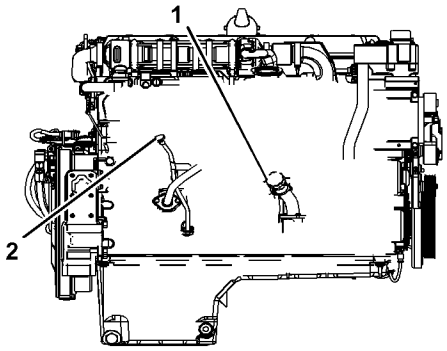

Illustration 96 g02455244

Typical installation of the oil level gauge

(1) Oil filler cap
(2) Oil level gauge

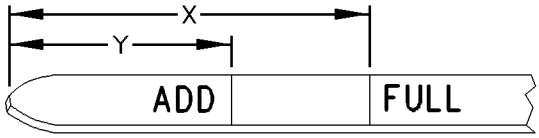

Illustration 97 g00110310

Partial view of the oil level gauge

(Y) “ADD” mark
(X) “FULL” mark

NOTICE
Perform this maintenance with the engine stopped.

NOTICE
Engine damage can occur if the crankcase is filled above the “FULL” mark on the oil level gauge (dipstick).

An overfull crankcase can cause the crankshaft to dip into the oil. This will reduce the power that is developed and also force air bubbles into the oil. These bubbles (foam) can cause the following problems: reduction of the oil's ability to lubricate, reduction of oil pressure, inadequate cooling, oil blowing out of the crankcase breathers and excessive oil consumption.

Excessive oil consumption will cause deposits to form on the pistons and in the combustion chamber. Deposits in the combustion chamber lead to the following problems: guttering of the valves, packing of carbon under the piston rings and wear of the cylinder liner.

If the oil level is above the “FULL” mark on the oil level gauge, drain some of the oil immediately.

1. Remove the oil filler cap and check the oil level. Maintain the oil level between the “ADD” mark (Y) and the “FULL” mark (X) on the oil level gauge (1). Do not fill the crankcase above “FULL” mark (X).
2. In order to choose the correct type of oil for this engine, refer to this Operation and Maintenance Manual, “Fluid Recommendations”.
3. Clean the oil filler cap. Install the oil filler cap.
4. Record the amount of oil that is added. For the next oil sample and analysis, include the total amount of oil that has been added since the previous sample. Recording this information helps to provide the most accurate oil analysis.

i04237495

Engine Oil Sample - Obtain

SMCS Code: 1348-554-SM

In addition to a good preventive maintenance program, Caterpillar recommends using S·O·S oil analysis at regularly scheduled intervals. S·O·S oil analysis provides infrared analysis, which is required for determining nitration and oxidation levels.

Obtain the Sample and the Analysis

WARNING

Hot oil and hot components can cause personal injury. Do not allow hot oil or hot components to contact the skin.

Before you take the oil sample, complete the Label, PEEP5031 for identification of the sample. In order to help obtain the most accurate analysis, provide the following information:

- Engine model
- Service hours on the engine
- The number of hours that have accumulated since the last oil change
- The amount of oil that has been added since the last oil change

To ensure that the sample is representative of the oil in the crankcase, obtain a warm, mixed oil sample.

To avoid contamination of the oil samples, the tools and the supplies that are used for obtaining oil samples must be clean.

Caterpillar recommends using the sampling valve in order to obtain oil samples. The quality and the consistency of the samples are better when the sampling valve is used. The location of the sampling valve allows oil that is flowing under pressure to be obtained during normal engine operation.

The 169-8373 Fluid Sampling Bottle is recommended for use with the sampling valve. The fluid sampling bottle includes the parts that are needed for obtaining oil samples. Instructions are also provided.

NOTICE
Always use a designated pump for oil sampling, and use a separate designated pump for coolant sampling. Using the same pump for both types of samples may contaminate the samples that are being drawn. This contaminate may cause a false analysis and an incorrect interpretation that could lead to concerns by both dealers and customers.

If the engine is not equipped with a sampling valve, use the 1U-5718 Vacuum Pump. The pump is designed to accept sampling bottles. Disposable tubing must be attached to the pump for insertion into the sump.

For instructions, see Special Publication, PEGJ0047, “How To Take A Good S·O·S Oil Sample”. Consult your Cat dealer for complete information and assistance in establishing an S·O·S program for your engine.

i04092890

Engine Oil and Filter - Change

SMCS Code: 1318-510

WARNING

Hot oil and hot components can cause personal injury. Do not allow hot oil or hot components to contact the skin.

Selection of Oil Change Interval

Refer to this Operation and Maintenance Manual, “Fluid Recommendations” for further information about oils that may be used in Caterpillar engines.

Refer to this Operation and Maintenance Manual, “Severe Service Application” to determine if the oil change interval should be reduced from the normal change interval. If operating in any of the conditions or environments outlined in the Severe Service Application, use S·O·S Services oil analysis to determine the oil change interval. If S·O·S Services oil analysis is not being used, the oil change interval should be reduced to 250 hrs.

Table 13

Oil Change Interval (1)		
Multigrade Oil Type	**Operating Conditions**	
	Normal	**Severe Service Application**
Cat DEO-ULS Preferred	500 hr	250 hr
Oil meeting the requirements of the Cat ECF-3 Specification or the API CJ-4 classification 8 minimum TBN Preferred	500 hr	250 hr
Oil meeting the requirements of the ACEA C9/E6 Specification TBN below 10.4	500 hr	250 hr

(1) Refer to Special Publication, PEHJ0192, “Optimizing Oil Change Intervals” for further information..

Drain the Engine Oil

After the engine has been run at the normal operating temperature, stop the engine. Attach a “DO NOT OPERATE” or a similar warning tag to the ignition keyswitch before the engine is serviced.

NOTICE
Care must be taken to ensure that fluids are contained during performance of inspection, maintenance, testing, adjusting and repair of the product. Be prepared to collect the fluid with suitable containers before opening any compartment or disassembling any component containing fluids.

Refer to Special Publication, NENG2500, “Caterpillar Dealer Service Tool Catalog” or refer to Special Publication, PECJ0003, “Caterpillar Shop Supplies and Tools Catalog” for tools and supplies suitable to collect and contain fluids on Caterpillar products.

Dispose of all fluids according to local regulations and mandates.

1. Remove the oil drain plug in order to allow the oil to drain.
2. After the oil has drained, the oil drain plug should be cleaned and installed.

Replace the Oil Filter

NOTICE
Caterpillar oil filters are built to Caterpillar specifications. Use of an oil filter not recommended by Caterpillar could result in severe engine damage to the engine bearings, crankshaft, etc., as a result of the larger waste particles from unfiltered oil entering the engine lubricating system. Only use oil filters recommended by Caterpillar .

Illustration 98 g00103713
Typical filter mounting base and filter gasket

1. Remove the oil filter with a 185-3630 Strap Wrench.
2. Clean the sealing surface of the filter mounting base. Ensure that all of the old oil filter gasket is removed.
3. Apply clean engine oil to the new oil filter gasket.

NOTICE
Do not fill the oil filters with oil before installing them. This oil would not be filtered and could be contaminated. Contaminated oil can cause accelerated wear to engine components.

4. Install the oil filter. Tighten the oil filter until the oil filter gasket contacts the base. Tighten the oil filter by hand according to the instructions that are shown on the oil filter. Do not overtighten the oil filter.

Fill the Engine Crankcase

1. Remove the oil filler cap. Fill the crankcase with the proper amount of oil. Refer to the Operation and Maintenance Manual, “Fluid Recommendations” topic (Maintenance Section) for more information.

NOTICE
If equipped with an auxiliary oil filter or system, extra oil must be added when filling the crankcase. Follow the OEM or filter manufacturer's recommendations. If the extra oil is not added, the engine may starve for oil.

NOTICE
To help prevent crankshaft or bearing damage, crank engine to fill all filters before starting. Do not crank engine for more than 30 seconds.

2. Start the engine and run the engine at “LOW IDLE” for 2 minutes. Perform this procedure in order to ensure that the lubrication system has oil and that the oil filters are filled. Inspect the oil filter for oil leaks.
3. Stop the engine and allow the oil to drain back to the sump for a minimum of 10 minutes.
4. Remove the oil level gauge in order to check the oil level. Maintain the oil level between the “ADD” and “FULL” marks on the “ENGINE STOPPED” side of the oil level gauge.

i01458399

Engine Storage Procedure - Check

SMCS Code: 1000-535

The oil change interval may be extended to 12 months for a vehicle that is operated seasonally and placed in storage for the remainder of the year by using the required storage procedures and the required start-up procedures. This extension is permitted if the following categories for oil change intervals in the Operation and Maintenance Manual, “Maintenance Interval Schedule” have not been reached:

- Mileage
- Operating hours
- Fuel consumption

If an engine is out of operation and if use of the engine is not planned, special precautions should be made. If the engine will be stored for more than three months, a complete protection procedure is recommended. For more detailed information on engine storage, see Special Instruction, SEHS9031, “Storage Procedure For Caterpillar Products”.

If the engine will not be started for several weeks, the lubricating oil will drain from the cylinder walls and from the piston rings. Rust can form on the cylinder liner surface. Rust on the cylinder liner surface will cause increased engine wear and a reduction in engine service life. Caterpillar recommends the use of volatile corrosion inhibitor (VCI) oil in order to prevent internal engine damage due to moisture during storage. These inhibitors in the VCI oil act by evaporating inside the engine. The inhibitors then condense over the inside surfaces of the engine. The evaporation process and the condensing process offers full protection to surfaces that cannot be reached with preservatives. 0.9 L (1.0 qt) of 4C-6792 VCI oil will treat 28.4 L (30.0 qt) of engine oil. This will give a 3 percent concentration of VCI oil. The engine must be completely sealed when the engine is stored in order for the VCI oil to function properly. The VCI oil is easily cleaned from the engine when you remove the engine from storage. The volatile vapors are removed by simply running the engine to operating temperature. A mineral oil base is left behind after the volatile vapors are removed.

i03964791

Engine Valve Lash - Check

SMCS Code: 1105-535

Note: Procedures for adjusting the valve lash can be found in Systems Operation/Testing and Adjusting, “Valve Lash Adjustment”. Consult your Cat dealer for assistance.

WARNING

Ensure that the engine cannot be started while this maintenance is being performed. To help prevent possible injury, do not use the starting motor to turn the flywheel.

Hot engine components can cause burns. Allow additional time for the engine to cool before measuring/adjusting valve lash clearance.

i02096133

Fuel System - Prime

SMCS Code: 1250-548; 1258-548

NOTICE

Do not allow dirt to enter the fuel system. Thoroughly clean the area around a fuel system component that will be disconnected. Fit a suitable cover over disconnected fuel system component.

1. Turn the engine start switch to the ON position. Leave the engine start switch in the ON position for two minutes.
2. Verify that the water separator is full of fuel.
3. If the water separator is not full of fuel, turn the engine start switch OFF and then turn the engine start switch ON. This will cycle the fuel priming pump again.
4. When the water separator is full of fuel, attempt to start the engine. If the engine starts and the engine runs rough or the engine misfires, operate at low idle until the engine is running smoothly. If the engine cannot be started, or if the engine continues to misfire or smoke, repeat Step 1.

i05354209

Fuel System Primary Filter (Water Separator) Element - Replace

SMCS Code: 1260-510-FQ; 1263-510-FQ

Water in the fuel can cause the engine to run rough. Water in the fuel may cause an electronic unit injector to fail. If the fuel has been contaminated with water, the element should be changed before the regularly scheduled interval.

The primary filter/water separator also provides filtration in order to help extend the life of the secondary fuel filter. The element should be changed regularly. If a vacuum gauge is installed, the primary filter/water separator should be changed at 50 to 70 kPa (15 to 20 inches Hg).

Replace the Element

WARNING

Fuel leaked or spilled onto hot surfaces or electrical components can cause a fire. To help prevent possible injury, turn the start switch off when changing fuel filters or water separator elements. Clean up fuel spills immediately.

NOTICE

Care must be taken to ensure that fluids are contained during performance of inspection, maintenance, testing, adjusting, and repair of the product. Be prepared to collect the fluid with suitable containers before opening any compartment or disassembling any component containing fluids.

Refer to Special Publication, NENG2500, “Dealer Service Tool Catalog” for tools and supplies suitable to collect and contain fluids on Cat products.

Dispose of all fluids according to local regulations and mandates.

NOTICE

Do not allow dirt to enter the fuel system. Thoroughly clean the area around a fuel system component that will be disconnected. Fit a suitable cover over disconnected fuel system component.

NOTICE

Do not fill fuel filters with fuel before installing them. The fuel will not be filtered and could be contaminated. Contaminated fuel will cause accelerated wear to fuel system parts. The fuel system should be primed prior to starting the engine.

1. Close the main fuel supply valve.

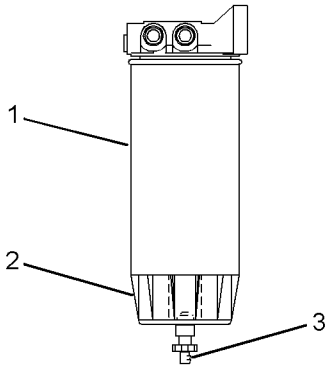

Illustration 99 g01453091

(1) Element
(2) Bowl
(3) Drain

2. Remove element (1) from the element mounting base while bowl (2) is attached.

3. Dispose of the contents of the filter. Remove bowl (2) from element (1). The bowl is reusable. Do not discard the bowl. Dispose of the used element.

4. Remove the O-ring from the gland of the bowl. Clean the following components:

- Bowl
- O-ring
- Mounting base

Inspect the O-ring for damage and for deterioration. Replace the O-ring, if necessary.

5. Lubricate the O-ring with clean diesel fuel.

6. Install bowl (2) on a new element. Tighten the bowl by hand. Do not use tools in order to tighten the bowl.

7. Lubricate the top seal of element (1) with clean diesel fuel. Install the new element on the mounting base. Tighten the element by hand.

NOTICE

The water separator is under suction during normal engine operation. Ensure that the vent plug is tightened securely to help prevent air from entering the fuel system.

8. Open the main fuel supply valve.

9. Start the engine and check for leaks. Run the engine for 1 minute. Stop the engine and check for leaks again.

Detecting leaks is difficult while the engine is running. The primary filter/water separator is under suction. A leak will allow air to enter the fuel. The air in the fuel can cause low power due to aeration of the fuel. Ensure that the components are correctly installed to prevent air from entering the fuel system.

i02927285

Fuel System Primary Filter/ Water Separator - Drain

SMCS Code: 1260-543; 1263-543

WARNING

Fuel leaked or spilled onto hot surfaces or electrical components can cause a fire. To help prevent possible injury, turn the start switch off when changing fuel filters or water separator elements. Clean up fuel spills immediately.

NOTICE

Care must be taken to ensure that fluids are contained during performance of inspection, maintenance, testing, adjusting and repair of the product. Be prepared to collect the fluid with suitable containers before opening any compartment or disassembling any component containing fluids.

Refer to Special Publication, NENG2500, “Caterpillar Dealer Service Tool Catalog” for tools and supplies suitable to collect and contain fluids on Caterpillar products.

Dispose of all fluids according to local regulations and mandates.

NOTICE

Do not allow dirt to enter the fuel system. Thoroughly clean the area around a fuel system component that will be disconnected. Fit a suitable cover over disconnected fuel system component.

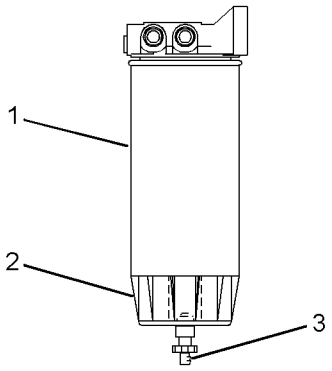

Illustration 100 g01453091

(1) Element
(2) Bowl
(3) Drain

Bowl (2) should be monitored daily for signs of water. If water is present, drain the water from the bowl.

1. Open drain (3). The drain is a self-ventilated drain. Catch the draining water in a suitable container. Dispose of the water properly.
2. Close drain (3).

NOTICE

The water separator is under suction during normal engine operation. Ensure that the drain valve is tightened securely to help prevent air from entering the fuel system.

i04158105

Fuel System Secondary Filter - Replace

SMCS Code: 1261-510-SE

WARNING

Fuel leaked or spilled onto hot surfaces or electrical components can cause a fire. To help prevent possible injury, turn the start switch off when changing fuel filters or water separator elements. Clean up fuel spills immediately.

NOTICE

Do not allow dirt to enter the fuel system. Thoroughly clean the area around a fuel system component that will be disconnected. Fit a suitable cover over any disconnected fuel system components.

NOTICE

Care must be taken to ensure that fluids are contained during performance of inspection, maintenance, testing, adjusting and repair of the product. Be prepared to collect the fluid with suitable containers before opening any compartment or disassembling any component containing fluids.

Refer to Special Publication, NENG2500, “Caterpillar Dealer Service Tool Catalog” or refer to Special Publication, PECJ0003, “Caterpillar Shop Supplies and Tools Catalog” for tools and supplies suitable to collect and contain fluids on Caterpillar products.

Dispose of all fluids according to local regulations and mandates.

1. Stop the engine. Turn the ignition switch to the OFF position or disconnect the battery. Refer to this Operation and Maintenance Manual, “Battery or Battery Cable - Disconnect” for more information. Shut off the fuel supply valve (if equipped).
2. It may be necessary to relieve residual fuel pressure from the fuel system before the fuel filters are removed. Wait from 1 minute to 5 minutes until the fuel pressure has lowered. Use a suitable container in order to catch any fuel that may spill.
3. Remove the used fuel filters and discard the used fuel filters.
4. Apply clean diesel fuel to the new fuel filter o-rings.

NOTICE
Do not fill the secondary fuel filter with fuel before installing. The fuel would not be filtered and could be contaminated. Contaminated fuel will cause accelerated wear to fuel system parts.

NOTICE
In order to meet expected fuel system component life, 4 micron(c) absolute or less secondary fuel filtration is required for all Caterpillar Diesel Engines that are equipped with unit injected fuel systems. Note that all current Caterpillar Diesel Engines are factory equipped with Caterpillar Advanced Efficiency 4 micron(c) absolute fuel filters.

Caterpillar does not warrant the quality or performance of non-Caterpillar fluids and filters.

5. Install the new fuel filters. Spin the fuel filters onto the fuel filter bases until the o-rings contact the bases. Use the rotation index marks on the filters as a guide for proper tightening. Tighten the filters according to the instructions that are on the fuel filters. Do not overtighten the filters.

6. Open the fuel supply valve. The engine will need to be purged of air. Refer to this Operation and Maintenance Manual, “Fuel System - Prime” for more information.

i05111531

Fuel Tank Water and Sediment - Drain

SMCS Code: 1273-543-M&S

NOTICE
Care must be taken to ensure that fluids are contained during performance of inspection, maintenance, testing, adjusting, and repair of the product. Be prepared to collect the fluid with suitable containers before opening any compartment or disassembling any component containing fluids.

Refer to Special Publication, NENG2500, “Cat Dealer Service Tool Catalog” or refer to Special Publication, PECJ0003, “Cat Shop Supplies and Tools Catalog” for tools and supplies suitable to collect and contain fluids on Cat products.

Dispose of all fluids according to local regulations and mandates.

Fuel Tank

Fuel quality is critical to the performance and to the service life of the engine. Water in the fuel can cause excessive wear to the fuel system. Condensation occurs during the heating and cooling of fuel. The condensation occurs as the fuel passes through the fuel system and the fuel returns to the fuel tank. This causes water to accumulate in fuel tanks. Draining the fuel tank regularly and obtaining fuel from reliable sources can help to eliminate water in the fuel.

Drain the Water and the Sediment

Fuel tanks should contain some provision for draining water and draining sediment from the bottom of the fuel tanks.

Open the drain valve on the bottom of the fuel tank in order to drain the water and the sediment. Close the drain valve.

Note: Failure to close the drain can allow air into the system, which could have detrimental results to performance.

Check the fuel daily. Drain the water and sediment from the fuel tank after operating the engine. Drain the water and sediment from the fuel tank after the fuel tank has been filled. Allow 5 to 10 minutes before performing this procedure.

Fill the fuel tank after operating the engine in order to drive out moist air. This procedure will help prevent condensation. Do not fill the tank to the top. The fuel expands as the fuel gets warm. The tank may overflow.

Some fuel tanks use supply pipes that allow water and sediment to settle below the end of the fuel supply pipe. Some fuel tanks use supply lines that take fuel directly from the bottom of the tank. If the engine is equipped with this system, regular maintenance of the fuel system filter is important.

Fuel Storage Tanks

Drain the water and the sediment from the fuel storage tank during the following conditions:

- Weekly
- Oil change
- Refill of the tank

This procedure will help prevent water or sediment from being pumped from the storage tank into the engine fuel tank. A four micron(c) absolute filter for the breather vent on the fuel tank is also recommended.

If a bulk storage tank has been refilled or moved recently, allow adequate time for the sediment to settle before filling the engine fuel tank. Internal baffles in the bulk storage tank will also help trap sediment. Filtering fuel that is pumped from the storage tank helps to ensure the quality of the fuel. When possible, water separators should be used.

i05226716

Fumes Disposal Filter Element - Replace

SMCS Code: 1074

The filter for the open crankcase ventilation system (OCV) may be located toward the front or toward the rear of the left side of the engine. A filter that has been used may contain a small amount of engine oil.

NOTICE

Care must be taken to ensure that fluids are contained during performance of inspection, maintenance, testing, adjusting and repair of the machine. Be prepared to collect the fluid with suitable containers before opening any compartment or disassembling any component containing fluids.

Refer to Special Publication, NENG2500, “Caterpillar Tools and Shop Products Guide”, for tools and supplies suitable to collect and contain fluids in Caterpillar machines.

Dispose of all fluids according to local regulations and mandates.

NOTICE

Failure to perform this maintenance procedure at less than 1500 service hours will not void the emissions-related warranty.

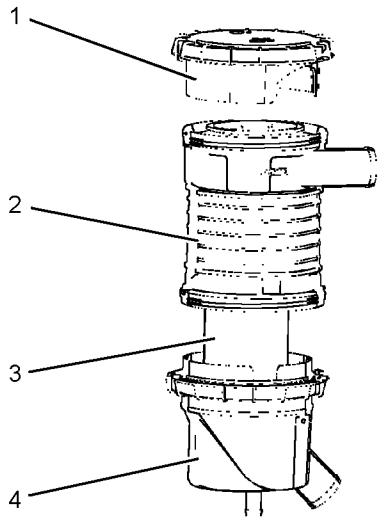

Illustration 101 g02021434

(1) Cap
(2) Housing for the filter element
(3) Filter element
(4) Cup

Remove either the cap or the cup from the housing for the OCV filter. Remove the OCV filter. The filter may not be used again. Dispose of the filter. Place a new OCV filter inside the filter housing. If the cap was removed, replace the cap. If the cup was removed, replace the cup. Tighten hand tight.

Note: Caterpillar will not be held liable for an engine that does not comply with EPA emissions standards due to modification of the OCV filter or due to the use of a filter that is not approved by Caterpillar.

i03965989

Grounding Stud - Inspect/ Clean/Tighten

SMCS Code: 7423-040; 7423-070; 7423-079

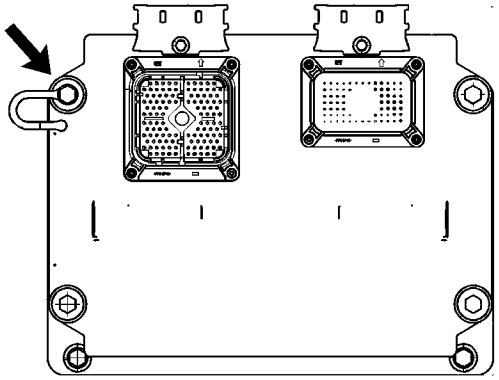

Illustration 102 g01376112

The grounding stud is located on the upper left corner of the engine control module.

Inspect the OEM harness for good connections. Inspect the condition of the OEM harness.

The grounding stud must have a wire ground to the battery. Tighten the grounding stud at every oil change. Ground wires and straps should be combined at engine grounds. All grounds should be tight and free of corrosion.

- Clean the grounding stud and the terminals for the ground strap with a clean cloth.
- If the connections are corroded, clean the connections with a solution of baking soda and water.
- Keep the grounding stud and the strap clean and coated with MPGM grease or petroleum jelly.

i05373687

Hoses and Clamps - Inspect/ Replace

SMCS Code: 7554-040; 7554-510

Hoses and clamps must be inspected periodically and replaced at the recommended interval to ensure safe and continuous operation of the engine. Failure to replace a fuel hose at the recommended change interval may result in a hazardous situation. Take proper safety precautions before inspecting or replacing hoses and clamps.

Note: Always use a board or cardboard when the engine components are checked for leaks. Leaking fluid that is under pressure can cause serious injury or possible death. Leaks that are the size of a pin hole are included. Refer to Operation and Maintenance Manual, “General Hazard Information” for more information.

Inspect the Hoses and the Clamps

Inspect all hoses for leaks that are caused by the following conditions. Replace any hose which exhibits any of the following conditions. Failure to replace a hose which exhibits any of the following conditions may result in a hazardous situation.

- Hoses which are cracked
- Hoses which are soft
- Outer covering that is chafed or cut
- Exposed wire that is used for reinforcement
- Outer covering that is ballooning locally
- Flexible part of the hose that is kinked or crushed
- Armoring that is embedded in the outer covering
- Hoses which exhibit signs of leakage which are not the result of loose couplings or clamps

Inspect all clamps for the following conditions. Replace any clamp which exhibits signs of any of the following conditions.

- Cracking
- Looseness
- Damage

Inspect all couplings for leaks. Replace any coupling which exhibits signs of leaks.

Each installation application can be different. The differences depend on the following factors:

- Type of hose
- Type of fitting material
- Anticipated expansion and contraction of the hose
- Anticipated expansion and contraction of the fittings

Due to extreme temperature changes, the hose will heat set. Heat setting causes hose clamps to loosen which can result in leaks. A constant torque hose clamp will help to prevent loose hose clamps.

Replace hoses that are cracked or soft. Replace hoses that show signs of leakage. Replace hoses that show signs of damage. Replace hose clamps that are cracked or damaged. Tighten or replace hose clamps which are loose.

Replace the Hoses and the Clamps

NOTICE

Care must be taken to ensure that fluids are contained during performance of inspection, maintenance, testing, adjusting, and repair of the product. Be prepared to collect the fluid with suitable containers before opening any compartment or disassembling any component containing fluids.

Refer to Special Publication, NENG2500, “Cat Dealer Service Tool Catalog” or refer to Special Publication, PECJ0003, “Cat Shop Supplies and Tools Catalog” for tools and supplies suitable to collect and contain fluids on Cat products.

Dispose of all fluids according to local regulations and mandates.

Cooling System

WARNING

Pressurized System: Hot coolant can cause serious burns. To open the cooling system filler cap, stop the engine and wait until the cooling system components are cool. Loosen the cooling system pressure cap slowly in order to relieve the pressure.

WARNING

Personal injury can result from removing hoses or fittings in a pressure system.

Failure to relieve pressure can cause personal injury.

Do not disconnect or remove hoses or fittings until all pressure in the system has been relieved.

1. Stop the engine.

2. Allow the engine to cool.

3. Before servicing a coolant hose, slowly loosen the filler cap for the cooling system in order to relieve any pressure.

4. Remove the filler cap for the cooling system.

5. Drain the coolant from the cooling system to a level that is below the hose that is being replaced. Drain the coolant into a suitable clean container. The coolant can be reused.

6. Remove the hose clamps.

7. Disconnect the old hose.

8. Replace the old hose with a new hose.

9. Install hose clamps which have been inspected or install new hose clamps. Refer to Specifications, SENR3130, “Torque Specifications”, “Hose Clamps” for information about selecting and installing the proper hose clamps.

10. Refill the cooling system.

11. Clean the filler cap for the cooling system. Inspect the gaskets on the filler cap. Replace the filler cap if the gaskets are damaged. Install the filler cap.

12. Start the engine. Inspect the cooling system for leaks.

Fuel System

WARNING

Personal injury can result from removing hoses or fittings in a pressure system.

Failure to relieve pressure can cause personal injury.

Do not disconnect or remove hoses or fittings until all pressure in the system has been relieved.

WARNING

Contact with high pressure fuel may cause fluid penetration and burn hazards. High pressure fuel spray may cause a fire hazard. Failure to follow these inspection, maintenance and service instructions may cause personal injury or death.

NOTICE

Do not bend or strike high pressure lines. Do not install bent or damaged lines, tubes or hoses. Repair any loose or damaged fuel and oil lines, tubes and hoses. Leaks can cause fires. Inspect all lines, tubes and hoses carefully. Tighten all connections to the recommended torque.

NOTICE
Do not allow dirt to enter the fuel system. Thoroughly clean the area around a fuel system component that will be disconnected. Fit a suitable cover over any disconnected fuel system components.

Note: High-pressure fuel lines may be installed between the high-pressure fuel pump and the fuel injectors. High-pressure fuel lines are constantly charged with high pressure. Do not check the high-pressure fuel lines with the engine or the starting motor in operation. Wait for 10 minutes after the engine stops before you perform any service or repair on high-pressure fuel lines. Waiting for 10 minutes will to allow the pressure to be purged.

1. Drain the fuel from the fuel system to a level that is below the hose that is being replaced.
2. Remove the hose clamps.
3. Disconnect the old hose.
4. Replace the old hose with a new hose.
5. Install hose clamps which have been inspected or install new hose clamps. Refer to Specifications, SENR3130, “Torque Specifications”, “Hose Clamps” for information about selecting and installing the proper hose clamps.
6. Carefully inspect the engine for any spilled fuel. Make sure that no fuel remains on or close to the engine.

Note: Fuel must be added to the fuel system ahead of the fuel filter.

7. Refill the fuel system. Refer to this Operation and Maintenance Manual, “Fuel System - Prime” for information about priming the engine with fuel.
8. Start the engine. Inspect the fuel system for leaks.

Lubrication System

WARNING

Hot oil and hot components can cause personal injury. Do not allow hot oil or hot components to contact the skin.

1. Drain the oil from the lubrication system to a level that is below the hose that is being replaced.
2. Remove the hose clamps.
3. Disconnect the old hose.
4. Replace the old hose with a new hose.
5. Install hose clamps which have been inspected or install new hose clamps. Refer to Specifications, SENR3130, “Torque Specifications”, “Hose Clamps” for information about selecting and installing the proper hose clamps.
6. Refill the lubrication system. Refer to this Operation and Maintenance Manual, “Engine Oil Level - Check” in order to ensure that the lubrication system is filled with the proper amount of engine oil.
7. Start the engine. Inspect the lubrication system for leaks.

Air System

1. Remove the hose clamps.
2. Disconnect the old hose.
3. Replace the old hose with a new hose.
4. Install hose clamps which have been inspected or install new hose clamps. Refer to Specifications, SENR3130, “Torque Specifications”, “Hose Clamps” for information about selecting and installing the proper hose clamps.

Note: The bellows and the V-clamps that are used on the bellows should never be reused.

5. Start the engine. Inspect the air lines for leaks.

i05389715

Injector (Diesel Exhaust Fluid) - Replace

SMCS Code: 108I-510

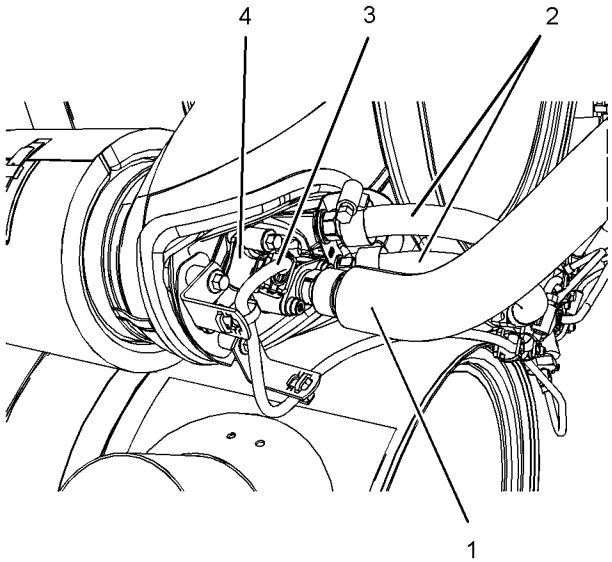

Illustration 103 g03363165

Typical example shown

1. Remove the diesel exhaust fluid (DEF) line (1) from the injector (4).
2. Remove the coolant lines (2) from the injector.
3. Remove the electrical connector (3) from the injector.
4. Remove the bolts from the injector and remove the injector.
5. Replace gasket. The steel side of the gasket should face towards diesel particulate filter (DPF) outlet.
6. Replace the injector.
7. Apply anti-seize to bolt threads.
8. Torque the bolts of the injector to 5 N·m (3.7 lb ft). Retighten all bolts to 5 N·m (3.7 lb ft), then turn 90°.
9. Connect the electrical connector.
10. Connect the coolant lines.
11. Connect the DEF line.

i04138631

Overhaul Considerations

SMCS Code: 7595-043

Reduced hours of operation at full load will result in a lower average power demand and reduced fuel consumption. A decreased average power demand should increase both the engine service life and the overhaul interval.

The need for an overhaul is indicated by increased fuel consumption, increased oil consumption, excessive engine blowby, and reduced power. Arctic temperatures, extreme high temperatures, corrosive environments, or extreme dusty conditions contribute to premature wear and the need for an overhaul.

The following factors are important when a decision is being made on the proper time for an engine overhaul:

- The need for preventive maintenance
- The quality of the fuel that is being used
- The operating conditions
- The results of the S·O·S analysis

Note: The aftertreatment system can be expected to function properly for the useful life of the engine (emissions durability period), as defined by regulation, subject to prescribed maintenance requirements being followed.

Oil Consumption as an Overhaul Indicator

Oil consumption, fuel consumption, and maintenance information can be used to estimate the total operating cost for your Caterpillar engine. Oil consumption can also be used to estimate the required capacity of a makeup oil tank that is suitable for the maintenance intervals.

Oil consumption is in proportion to the percentage of the rated engine load. As the percentage of the engine load is increased, the amount of oil that is consumed per hour also increases.

The oil consumption rate (brake-specific oil consumption) is measured in grams per kW/h (lb per bhp). The brake-specific oil consumption (BSOC) depends on the engine load. Consult your Caterpillar dealer for assistance in determining the typical oil consumption rate for your engine.

When the oil consumption of an engine has risen to three times the original oil consumption rate due to normal wear, an engine overhaul should be scheduled. There may be a corresponding increase in blowby and a slight increase in fuel consumption.

Overhaul Options

Before Failure Overhaul

A planned overhaul before failure may be the best value for the following reasons:

- Costly unplanned downtime can be avoided.
- Many original parts can be reused according to the standards for reusable parts.
- The service life of the engine can be extended without the risk of a major catastrophe due to engine failure.
- The best cost/value relationship per hour of extended life can be attained.

After Failure Overhaul

If a major engine failure occurs and the engine must be removed, many options are available. An overhaul should be performed if the engine block or the crankshaft needs to be repaired.

If the engine block is repairable and/or the crankshaft is repairable, the overhaul cost should be between 40 percent and 50 percent of the cost of a new engine with a similar exchange core.

This lower cost can be attributed to three aspects:

- Specially designed Caterpillar engine features
- Caterpillar dealer exchange components
- Caterpillar Inc. remanufactured exchange components

Overhaul Recommendation

To minimize downtime, Caterpillar Inc. recommends a scheduled engine overhaul by your Caterpillar dealer before the engine fails. A scheduled engine overhaul will provide you with the best cost/value relationship.

Note: Overhaul programs vary according to the engine application and according to the dealer that performs the overhaul. Consult your Caterpillar dealer for specific information about the available overhaul programs and about overhaul services for extending the engine life.

If an overhaul is performed without overhaul service from your Caterpillar dealer, be aware of the following maintenance recommendations.

Rebuild or Exchange

Cylinder Head Assembly, Cylinder Packs, Oil Pump, and Fuel Transfer Pump

These components should be inspected according to the instructions that are found in various Caterpillar reusability publications. The Special Publication, SEBF8029 lists the reusability publications that are needed for inspecting the engine parts.

If the parts comply with the established inspection specifications that are expressed in the reusable parts guideline, the parts should be reused.

Parts that are not within the established inspection specifications should be dealt with in one of the following manners:

- Salvaging
- Repairing
- Replacing

Using out-of-spec parts can result in the following problems:

- Unscheduled downtime
- Costly repairs
- Damage to other engine parts
- Reduced engine efficiency
- Increased fuel consumption

Reduced engine efficiency and increased fuel consumption translates into higher operating costs. Therefore, Caterpillar Inc. recommends repairing out-of-spec parts or replacing out-of-spec parts.

Inspection and/or Replacement

Crankshaft Bearings, Valve Rotators, and Crankshaft Seals

The following components may not last until the second overhaul.

- Thrust bearings
- Main bearings
- Rod bearings
- Valve rotators
- Crankshaft seals

Caterpillar Inc. recommends the installation of new parts at each overhaul period.

Inspect these parts while the engine is disassembled for an overhaul.

Inspect the crankshaft for any of the following conditions:

- Deflection
- Damage to the journals
- Bearing material that has seized to the journals

Check the journal taper and the profile of the crankshaft journals. Check these components by interpreting the wear patterns on the following components:

- Rod bearing
- Main bearings

Inspect the camshaft for damage to the journals and to the lobes.

Note: If the camshaft is removed for any reason, use the magnetic particle inspection process to check for cracks in the camshaft.

Inspect the following components for signs of wear or for signs of scuffing:

- Camshaft bearings
- Camshaft followers

Caterpillar Inc. recommends replacing the crankshaft vibration damper.

Oil Cooler Core

During an overhaul, Caterpillar Inc. recommends the removal of the oil cooler core. Clean the oil cooler core. Then, pressure test the oil cooler core.

NOTICE

Do not use caustic cleaners to clean the core.

Caustic cleaners can attack the internal metals of the core and cause leakage.

Note: Use this cleaning procedure to clean the oil cooler core.

1. Remove the oil cooler core.

2. Remove any debris from the oil cooler core. To remove debris from the oil cooler core, turn the oil cooler core onto one end.

3. Flush the oil cooler core internally with cleaner in order to loosen foreign substances. Flushing the oil cooler will also help to remove oil from the oil cooler core.

Note: Caterpillar Inc. recommends the use of Hydrosolv Liquid Cleaners. Table 14 lists the Hydrosolv Liquid Cleaners that are available from your Caterpillar dealer.

Table 14

Hydrosolv Liquid Cleaners		
Part Number	**Description**	**Size**
1U-5490	Hydrosolv 4165	19 L (5 US gallon)
174-6854	Hydrosolv 100	19 L (5 US gallon)

4. Use steam to clean the oil cooler core. Steam-cleaning the oil cooler core removes any remaining residue from the cleaner. Flush the fins of the oil cooler core. Remove any other trapped debris.

5. Wash the oil cooler core with hot, soapy water. Rinse the oil cooler core thoroughly with clean water.

WARNING

Personal injury can result from air pressure.

Personal injury can result without following proper procedure. When using pressure air, wear a protective face shield and protective clothing.

Maximum air pressure at the nozzle must be less than 205 kPa (30 psi) for cleaning purposes.

6. Dry the oil cooler core with compressed air. Direct the air in the reverse direction of the normal flow.

7. Inspect the components in order to ensure cleanliness. The oil cooler core should be pressure tested. Repair the oil cooler core, if necessary. Install the oil cooler core.

For more information about cleaning the cores, consult your Caterpillar dealer.

Obtain Coolant Analysis

The concentration of supplemental coolant additive (SCA) should be checked regularly with test kits or with S·O·S Coolant Analysis (Level 1). Further coolant analysis is recommended when the engine is overhauled.

For example, considerable deposits are found in the water jacket areas on the external cooling system, but the concentrations of coolant additives were carefully maintained. The coolant water probably contained minerals that were deposited on the engine over time.

A coolant analysis can be conducted in order to verify the condition of the water that is being used in the cooling system. A full water analysis can be obtained by consulting your local water utility company or an agricultural agent. Private laboratories are also available for water analysis.

Caterpillar Inc. recommends an S·O·S Coolant Analysis (Level 2).

S·O·S Coolant Analysis (Level 2)

An S·O·S Coolant Analysis (Level 2) is a comprehensive coolant analysis which completely analyzes the coolant and the effects on the cooling system. An S·O·S Coolant Analysis (Level 2) provides the following information:

- Complete S·O·S Coolant Analysis (Level 1)
- Visual inspection of properties
- Identification of metal corrosion
- Identification of contaminants
- Identification of built up impurities (corrosion and scale)

S·O·S Coolant Analysis (Level 2) provides a report of the results of both the analysis and the maintenance recommendations.

For more information about coolant analysis, see your Caterpillar dealer.

i03901481

Power Take-Off Clutch - Check

SMCS Code: 3055-535

NOTICE
New power take-offs should have the clutch adjustment checked before being placed into service. The clutch adjustment should be checked again after the first ten hours of operation. New clutch plates have a “wear in” period, and the clutch may require several adjustments until the new plates are “worn in”.

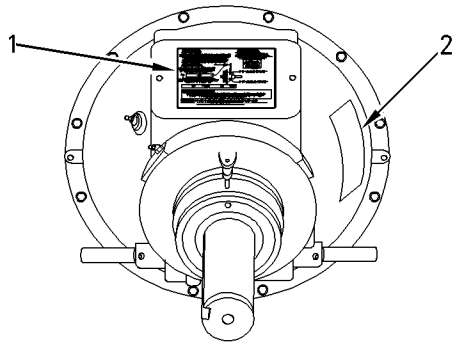

Illustration 104 g00781502

(1) Instruction plate
(2) Serial number plate

Check the clutch adjustment regularly after “wear in”. Heavy-duty applications which have engagements that are frequent and relatively long periods of clutch slippage require more frequent adjustment than light-duty applications. The operating torque should be measured in order to determine if a clutch adjustment is required.

Refer to the OEM information and instruction plate (1) for instructions on lubrication, adjustment, and other recommendations for service. Perform the maintenance that is specified on the instruction plate.

WARNING

Do not operate the engine with the Instruction Plate cover removed from the clutch. Personal injury may result.

If the clutch is damaged to the point of burst failure, expelled pieces can cause personal injury to anyone in the immediate area. Proper safeguards must be followed to help prevent accidents.

i04020194

Radiator - Clean

SMCS Code: 1353-070

Note: Adjust the frequency of cleaning according to the effects of the operating environment.

Inspect the radiator for these items: damaged fins, corrosion, dirt, grease, insects, leaves, oil and other debris. Clean the radiator, if necessary.

WARNING

Personal injury can result from air pressure.

Personal injury can result without following proper procedure. When using pressure air, wear a protective face shield and protective clothing.

The maximum air pressure for cleaning purposes must be reduced to 205 kPa (30 psi) when the air nozzle is deadheaded.

Pressurized air is the preferred method for removing loose debris. Direct the air in the opposite direction of the air flow. Hold the nozzle approximately 6 mm (0.25 inch) away from the fins. Slowly move the air nozzle in a direction that is parallel with the tubes. This movement will remove debris that is between the tubes.

Pressurized water may also be used for cleaning. The maximum water pressure for cleaning purposes must be less than 275 kPa (40 psi). Use pressurized water in order to soften mud. Clean the core from both sides.

Use a degreaser and steam for removal of oil and grease. Clean both sides of the core. Wash the core with detergent and hot water. Thoroughly rinse the core with clean water.

After cleaning, start the engine and accelerate the engine to high idle rpm. This procedure will help in the removal of debris and drying of the core. Stop the engine. Use a light bulb behind the core in order to inspect the core for cleanliness. Repeat the cleaning, if necessary.

Inspect the fins for damage. Bent fins may be opened with a “comb”. Inspect these items for good condition: welds, mounting brackets, air lines, connections, clamps and seals. Make repairs, if necessary.

i00651416

Starting Motor - Inspect

SMCS Code: 1451-040; 1453-040

Caterpillar Inc. recommends a scheduled inspection of the starting motor. If the starting motor fails, the engine may not start in an emergency situation.

Check the starting motor for proper operation. Check the electrical connections and clean the electrical connections. Refer to the Service Manual for more information on the checking procedure and for specifications or consult your Caterpillar dealer for assistance.

i01185304

Walk-Around Inspection

SMCS Code: 1000-040

Inspect the Engine for Leaks and for Loose Connections

A walk-around inspection should only take a few minutes. When the time is taken to perform these checks, costly repairs and accidents can be avoided.

For maximum engine service life, make a thorough inspection of the engine compartment before starting the engine. Look for items such as oil leaks or coolant leaks, loose bolts, worn belts, loose connections and trash buildup. Make repairs, as needed:

- The guards must be in the proper place. Repair damaged guards or replace missing guards.
- Wipe all caps and plugs before the engine is serviced in order to reduce the chance of system contamination.

NOTICE

For any type of leak (coolant, lube, or fuel) clean up the fluid. If leaking is observed, find the source and correct the leak. If leaking is suspected, check the fluid levels more often than recommended until the leak is found or fixed, or until the suspicion of a leak is proved to be unwarranted.

NOTICE

Accumulated grease and/or oil on an engine or deck is a fire hazard. Remove this debris with steam cleaning or high pressure water.

- Ensure that the cooling lines are properly clamped and that the cooling lines are tight. Check for leaks. Check the condition of all pipes.
- Inspect the water pumps for coolant leaks.

Note: The water pump seal is lubricated by coolant in the cooling system. It is normal for a small amount of leakage to occur as the engine cools down and the parts contract.

Excessive coolant leakage may indicate the need to replace the water pump seal. For the removal of water pumps and the installation of water pumps and/or seals, refer to the Service Manual for the engine or consult your Caterpillar dealer.

- Inspect the lubrication system for leaks at the front crankshaft seal, the rear crankshaft seal, the oil pan, the oil filters and the valve cover.
- Inspect the fuel system for leaks. Look for loose fuel line clamps or for loose fuel line tie-wraps.
- Inspect the piping for the air inlet system and the elbows for cracks and for loose clamps. Ensure that hoses and tubes are not contacting other hoses, tubes, wiring harnesses, etc.
- Inspect the alternator belt and the accessory drive belts for cracks, breaks or other damage.

Belts for multiple groove pulleys must be replaced as matched sets. If only one belt is replaced, the belt will carry more load than the belts that are not replaced. The older belts are stretched. The additional load on the new belt could cause the belt to break.

- Drain the water and the sediment from fuel tanks on a daily basis in order to ensure that only clean fuel enters the fuel system.
- Inspect the wiring and the wiring harnesses for loose connections and for worn wires or frayed wires.
- Inspect the ground strap for a good connection and for good condition.
- Inspect the ECM to the cylinder head ground strap for a good connection and for good condition.
- Disconnect any battery chargers that are not protected against the current drain of the starting motor. Check the condition and the electrolyte level of the batteries, unless the engine is equipped with a maintenance free battery.
- Check the condition of the gauges. Replace any gauges that are cracked. Replace any gauge that can not be calibrated.

Warranty Section

Warranty Information

i05546814

Emissions Warranty Information

SMCS Code: 1000

The certifying engine manufacturer warrants to the ultimate purchaser and each subsequent purchaser that:

1. New non-road diesel engines and stationary diesel engines less than 10 liters per cylinder (including Tier 1 and Tier 2 marine engines < 37 kW, but excluding locomotive and other marine engines) operated and serviced in the United States and Canada, including all parts of their emission control systems (“emission related components”), are:

a. Designed, built, and equipped so as to conform, at the time of sale, with applicable emission standards prescribed by the United States Environmental Protection Agency (EPA) by way of regulation.

b. Free from defects in materials and workmanship in emission-related components that can cause the engine to fail to conform to applicable emission standards for the warranty period.

2. New non-road diesel engines (including Tier 1 and Tier 2 marine propulsion engines < 37 kW and Tier 1 through Tier 4 marine auxiliary engines < 37 kW, but excluding locomotive and other marine engines) operated and serviced in the state of California, including all parts of their emission control systems (“emission related components”), are:

a. Designed, built, and equipped so as to conform, at the time of sale, to all applicable regulations adopted by the California Air Resources Board (ARB).

b. Free from defects in materials and workmanship which cause the failure of an emission-related component to be identical in all material respects to the component as described in the engine manufacturer's application for certification for the warranty period.

The aftertreatment system can be expected to function properly for the lifetime of the engine (emissions durability period) subject to prescribed maintenance requirements being followed.

A detailed explanation of the Emission Control Warranty that is applicable to new non-road and stationary diesel engines, including the components covered and the warranty period, is found in a supplemental Special Publication. Consult your authorized Cat dealer to determine if your engine is subject to an Emission Control Warranty and to obtain a copy of the applicable Special Publication.

Reference Information Section

Engine Ratings

i01097462

Engine Rating Conditions

SMCS Code: 1000

All engine ratings are based on “SAE J1349”.

Ratings relate to the standard conditions of “AS1501”, of “ISO3046/1”, of “DIN6271”, and of “BS5514”.

The engine ratings are gross output ratings.

Gross Output Ratings – The total output capability of the engine that is equipped with standard accessories.

Standard accessories include the following components:

- Oil pumps
- Fuel pumps
- Water pumps

Subtract the power that is required to drive auxiliary components from the gross output. This will produce the net power that is available for the external load (flywheel).

i04291338

Engine Rating Definitions

SMCS Code: 1000

In selecting a rating for a specific application, the most important consideration is the time that is spent at full throttle. These rating definitions identify the percent of time at full throttle. The definitions also identify the corresponding times below rated rpm.

Note: The examples of the applications are only for reference. For an exact determination of the appropriate rating, follow the OEM specifications or consult your Cat dealer.

Table 15

Engine Rating Information				
Performance Rating	Load Factor	Time at Rated Load(1)		Examples of Applications
		Overall	Any One Instance	
A	100%	100%	n/a	Pipe line pumping Ventilation
B	85%	75%	n/a	Irrigation pumps Drilling applications Plant air compressors
C	70%	50%	Less than1 hour	Fire pumps Chippers Rock crushers Portable air compressors
D	50%	10%	Less than 30 minutes	Snowgroomer Snowblowers Cranes Water well drills
E	35%	5%	Less than 15 minutes	Standby centrifugal pumps Oil well servicing

(1) Both the overall time at rated load and the time the engine is operated in any one instance must be considered.

NOTICE

Operating engines above the rating definitions can result in shorter service life before overhaul.

Customer Service

i03910306

Customer Assistance

SMCS Code: 1000; 4450

USA and Canada

When a problem arises concerning the operation or the service of an engine, the problem will normally be managed by the dealer in your area.

Your satisfaction is a primary concern to Caterpillar and to Caterpillar dealers. If you have a problem that has not been handled to your complete satisfaction, follow these steps:

1. Discuss your problem with a manager from the dealership.

2. If your problem cannot be resolved at the dealer level, use the phone number that is listed below to talk with a Field Service Coordinator:

1-800-447-4986

The normal hours are from 8:00 to 4:30 Monday through Friday Central Standard Time.

3. If your needs have not been met still, submit the matter in writing to the following address:

Caterpillar Inc.
Manager, Customer Service, Engine Division
Mossville Bldg AC
P.O. Box 610
Mossville, Illinois 61552-0610

Please keep in mind: probably, your problem will ultimately be solved at the dealership, using the dealership facilities, equipment, and personnel. Therefore, follow the steps in sequence when a problem is experienced.

Outside of the USA and of Canada

If a problem arises outside the USA and outside Canada, and if the problem cannot be resolved at the dealer level, consult the appropriate Caterpillar office.

Latin America, Mexico, Carribean
Caterpillar Americas Co.
701 Waterford Way, Suite 200
Miami, FL 33126-4670
USA
Phone: 305-476-6800
Fax: 305-476-6801

Europe, Africa, and Middle East
Caterpillar Overseas S.A.
76 Route de Frontenex
P.O. Box 6000
CH-1211 Geneva 6
Switzerland
Phone: 22-849-4444
Fax: 22-849-4544

Far East
Caterpillar Asia Pte. Ltd.
7 Tractor Road
Jurong, Singapore 627968
Republic of Singapore
Phone: 65-662-8333
Fax: 65-662-8302

China
Caterpillar China Ltd.
37/F., The Lee Gardens
33 Hysan Avenue
Causeway Bay
G.P.O. Box 3069
Hong Kong
Phone: 852-2848-0333
Fax: 852-2848-0440

Japan
Shin Caterpillar Mitsubishi Ltd.
SBS Tower
10-1, Yoga 4-Chome
Setagaya-Ku, Tokyo 158-8530
Japan
Phone: 81-3-5717-1150
Fax: 81-3-5717-1177

Japan
Caterpillar Power Systems, Inc.
SBS Tower (14th floor)
4-10-1, Yoga
Setagaya-Ku, Tokyo 158-0097
Phone: 81-3-5797-4300
Fax: 81-3-5797-4359

Australia and New Zealand
Caterpillar of Australia Ltd.
1 Caterpillar Drive
Private Mail Bag 4
Tullamarine, Victoria 3043
Australia
Phone: 03-9953-9333
Fax: 03-9335-3366

i01028392

Ordering Replacement Parts

SMCS Code: 4450; 7567

WARNING

When replacement parts are required for this product Caterpillar recommends using Caterpillar replacement parts or parts with equivalent specifications including, but not limited to, physical dimensions, type, strength and material.

Failure to heed this warning can lead to premature failures, product damage, personal injury or death.

Quality Caterpillar replacement parts are available from Caterpillar dealers throughout the world. Caterpillar dealers' parts inventories are up-to-date. The parts stocks include all of the parts that are normally needed to protect your Caterpillar engine investment.

When you order parts, please specify the following information:

- Part number
- Part name
- Quantity

If there is a question concerning the part number, please provide your dealer with a complete description of the needed item.

When a Caterpillar engine requires maintenance and/or repair, provide the dealer with all the information that is stamped on the Information Plate. This information is described in this Operation and Maintenance Manual (Product Information Section).

Discuss the problem with the dealer. Inform the dealer about the conditions of the problem and the nature of the problem. Inform the dealer about when the problem occurs. This will help the dealer in troubleshooting the problem and solving the problem faster.

Reference Materials

i05264255

Maintenance Records

SMCS Code: 1000; 4450

Caterpillar Inc. recommends the retention of accurate maintenance records. Accurate maintenance records can be used for the following purposes:

- Determine operating costs.
- Establish maintenance schedules for other engines that are operated in the same environment.
- Show compliance with the required maintenance practices and maintenance intervals.

Maintenance records can be used for various other business decisions that are related to engine maintenance.

Maintenance records are a key element of a maintenance program that is managed. Accurate maintenance records can help your Cat dealer to fine-tune the recommended maintenance intervals in order to meet the specific operating situation. This should result in a lower engine operating cost.

Records should be kept for the following items:

Fuel Consumption – A record of fuel consumption is essential in order to determine when the load sensitive components should be inspected or repaired. Fuel consumption also determines overhaul intervals.

Service Hours – A record of service hours is essential to determine when the speed sensitive components should be inspected or repaired.

Documents – These items should be easy to obtain, and these items should be kept in the engine history file. All of the documents should show this information: date, service hours, fuel consumption, unit number and engine serial number. The following types of documents should be kept as proof of maintenance or repair for warranty:

Keep the following types of documents as proof of maintenance for warranty. Also, keep these types of documents as proof of repair for warranty:

- Dealer work orders and itemized bills
- Owner repair costs
- Owner receipts
- Maintenance log

i01176304

Maintenance Log

SMCS Code: 1000; 4450

Table 16

Engine Model	**Customer Identifier**
Serial Number	**Arrangement Number**

Service Hours	Quantity Of Fuel	Service Item	Date	Authorization

i04291189

Reference Material

SMCS Code: 1000; 4450

The following publications can be obtained from any Caterpillar dealer.

Coolants

- Special Publication, PMEP5027, “Label - ELC Radiator Label”
- Data Sheet, PEHJ0067, “Cat ELC (Extended Life Coolant)”
- Data Sheet, PEHP7057, “Coolant Analysis”
- Data Sheet, PEHP9554, “Cat DEAC (Diesel Engine Antifreeze/Coolant)”
- Special Publication, PELJ0176, “Cat ELC (Extended Life Coolant) 223-9116 Dilution Test Kit”

Fuels

- Engine Data Sheet, LEKQ4219, “Fuel Recommendations for Caterpillar Diesel Engines”

Greases

- Data Sheet, NEHP6010, “Cat Ultra 5Moly Grease”
- Special Instruction, NEHP6011, “Arctic Platinum Grease Spec Sheet”
- Data Sheet, NEHP6012, “Cat Desert Gold Grease”
- Data Sheet, NEHP6015, “Caterpillar Special Purpose Grease”
- Special Publication, PEGJ0035, “Grease Selection Guide”
- Data Sheet, PEHP0002, “Molybdenum Grease Data Sheet”
- Data Sheet, PEHJ0088, “Cat Multipurpose Grease”

Lubricants

- Special Publication, PEDP7035, “Optimizing Oil Change Intervals”
- Data Sheet, PEHJ0008, “Cat Arctic DEO SYN”
- Data Sheet, PEHJ0021, “Cat DEO (Diesel Engine Oil) APD, EAME, LACD Only”
- Data Sheet, PEHJ0059, “Cat DEO (for North America Only)”
- Special Publication, PEHP6001, “How To Take A Good Oil Sample”
- Special Instruction, PEHP7062, “Full Synthetic Diesel Engine Oil Data Sheet”
- Special Publication, PPHJ0072, “Cat DEO” (Brasil)

S·O·S Services

- Special Publication, NEHP6013, “S·O·S Fluids Analysis Products”
- Special Publication, PEDP7035, “Optimizing Oil Change Intervals”
- Special Publication, PEDP7036, “S·O·S Fluids Analysis Cornerstone”
- Special Publication, PEHP7057, “S·O·S Coolant Analysis”
- Special Instruction, PEHP7058, “S·O·S Trend Analysis Module Data Sheet”
- Special Instruction, PEHP7076, “Understanding S·O·S Services Tests”

Miscellaneous

- Service Manual, SENR9910, “C9 Acert Petrol Engine”
- Special Instruction, NENG2500, “Caterpillar Dealer Service Tool Catalog”
- Special Publication, PECP9067, “One Safe Source”
- Special Publication, SEBF8029, “Index of Publications on Reusability or Salvage of Used Parts”
- Special Publication, SEBF8062, “Procedure to Inspect and Clean Air Filters”
- Special Publication, SEBU5898, “Cold Weather Recommendations”
- Special Publication, SEBU6251, “Caterpillar Commercial Diesel Engine Fluids Recommendations”
- Special Instruction, SEHS7332, “Warning Tag - Do Not Operate”
- Special Instruction, SEHS7633, “Battery Test Procedure”
- Special Instruction, SEHS9031, “Storage Procedure for Caterpillar Products”
- Specifications, SENR3130, “Torque Specifications”
- Special Instruction, SMHS7001, “Assembly of Fan Drive Pulley Assemblies”

Additional Reference Material

The “Engine Fluids Data Book” can be obtained from the following locations: local technological society, local library and local college. If necessary, consult EMA at the following address:

Engine Manufacturers Associaton
Two North LaSalle Street, Suite 2200
Chicago, IL, USA 60602
E-mail: ema@enginemanufacturers.org
Telephone (312) 827-8700
Facsimile (312) 827-8737

The “Society of Automotive Engineers (SAE) Specifications” can be found in your SAE handbook. This publication can also be obtained from the following locations: local technological society, local library and local college. If necessary, consult SAE at the following address:

SAE International
400 Commonwealth Drive
Warrendale, PA, USA 15096-0001
Telephone (724) 776-4841

The “American Petroleum Institute Publication No. 1509” can be obtained from the following locations: local technological society, local library and local college. If necessary, consult API at the following address:

American Petroleum Institute
1220 L St. N.W.
Washington, DC, USA 20005
Telephone (202) 682-8000

The International Organization for Standardization (ISO) offers information and customer service regarding international standards and standardizing activities. ISO can also supply information on the following subjects that are not controlled by ISO: national standards, local standards, regulations, certification and related activities. Consult the member of ISO in your country.

International Organization for Standardization (ISO)
1, rue de Varembé
Case postale 56
CH-1211 Genève 20
Switzerland
Telephone +41 22 749 01 11
Facsimile +41 22 733 34 30
E-mail central@iso.ch
Web site http://www.iso.ch

European classifications are established by the Counseil International Des Machines a Combustion (CIMAC) (International Council on Combustion Engines).

CIMAC Central Secretariat
Lyoner Strasse 18
60528 Frankfurt
Germany
Telephone +49 69 6603 1567
Facsimile +49 69 6603 1566

i03989612

Decommissioning and Disposal

SMCS Code: 1000

When the product is removed from service, local regulations for the product decommissioning will vary. Disposal of the product will vary with local regulations. Consult the nearest Cat dealer for additional information.

Index

A

Additional Messages 6
After Starting Engine..... 42
Extended Idle at Cold Ambient Temperature 42
After Stopping Engine..... 49
Air Compressor - Check (If equipped) 64
Air Shutoff - Test 65
Air Tank Moisture and Sediment - Drain (If Equipped) 65
ARD Spark Plug - Clean 63
Installing the Spark Plug 64
Removing the Spark Plug 63

B

Battery - Recycle 66
Battery - Replace..... 66
Battery Disconnect Switch (If Equipped) 32
Battery Electrolyte Level - Check 66
Battery or Battery Cable - Disconnect 67
Before Starting Engine 14, 39
Belts - Inspect/Adjust/Replace..... 67
Alternator Belt 67
Drive Belt for the Air Compressor (If Equipped) 68
Inspection..... 67
Belts - Inspect/Replace (If Equipped) 68
Single Belt..... 68
Two or More Belts 69
Burn Prevention.....11
Batteries.....11
Coolant.....11
Oils.....11

C

Cold Weather Operation..... 46
Cold Weather Starting 39
Ether Injection System (If Equipped) 40
Compression Brake - Inspect/Adjust/ Replace..... 70
Coolant (DEAC) - Change 70
Cooling Systems with Heavy Deposits or Plugging 71
Drain 70
Fill..... 71
Flush 71
Coolant (ELC) - Change 72
Drain 72
Fill..... 73
Flush 73
Coolant Extender (ELC) - Add 73
Coolant Level - Check 74
Coolant Sample (Level 1) - Obtain 75
Coolant Sample (Level 2) - Obtain 76
Cooling System Supplemental Coolant Additive (SCA) - Test/Add (Systems Which are Filled with Conventional Coolant)..... 76
Maintain the Proper Concentration of SCA in the Coolant..... 77
Crushing Prevention and Cutting Prevention .. 13
Customer Assistance..... 108
Outside of the USA and of Canada..... 108
USA and Canada 108
Customer Service 108

D

Decommissioning and Disposal 113
DEF Filler Screen - Clean..... 77
DEF Filter (Sock) - Replace..... 78
Diesel Exhaust Fluid - Fill 79
Diesel Exhaust Fluid Filter - Replace..... 80
Diesel Particulate Filter - Clean 81
Diesel Particulate Filter Regeneration..... 43
Modes of Regeneration..... 43
Regeneration 43
Regeneration Indicators..... 43
Regeneration Switch..... 43
Regeneration System Warning Indicators ... 44
Regeneration Triggers 44
Driven Equipment - Check..... 81
Check the Alignment..... 81
Inspect the Drive Coupling..... 81
Inspect the Rear Gear Train..... 82

E

Electrical System 15
Grounding Practices 15
Emissions Certification Film 21
Emissions Warranty Information..... 106
Engaging the Driven Equipment..... 45
Engine - Clean 82

Engine Air Cleaner Element (Dual Element/ Box Type) - Replace 82
Primary Filter..... 82
Secondary Filter..... 83
Engine Air Cleaner Element (Dual Element/ Canister Type) - Clean/Replace (If Equipped) 84
Cleaning the Primary Air Cleaner Elements 85
Servicing the Air Cleaner Elements 84
Engine Air Cleaner Element (Single Element/Canister Type) - Clean/Replace (If Equipped) 86
Inspecting Air Cleaner Elements..... 87
Servicing the Air Cleaner Elements 87
Engine Air Cleaner Service Indicator - Inspect (If Equipped)..... 88
Test the Service Indicator..... 88
Engine Diagnostics..... 38
Engine Electronics..... 16
Engine Mounts - Inspect..... 88
Engine Oil and Filter - Change 90
Drain the Engine Oil 90
Fill the Engine Crankcase 91
Replace the Oil Filter..... 91
Selection of Oil Change Interval 90
Engine Oil Level - Check 88
Engine Oil Sample - Obtain 89
Obtain the Sample and the Analysis..... 89
Engine Operation..... 43
Engine Rating Conditions 107
Engine Rating Definitions 107
Engine Ratings 107
Engine Starting 14, 39
Engine Stopping 15, 48
Engine Storage Procedure - Check..... 91
Engine Valve Lash - Check..... 92

F

Fault Logging..... 38
Features and Controls 27
Fire Prevention and Explosion Prevention 11
Ether 13
Fire Extinguisher..... 13
Lines, Tubes, and Hoses 13
Fluid Recommendations..... 50
Biodiesel 57
Coolant..... 54
Diesel Engine Oil 51
Diesel Exhaust Fluid 55
Diesel Fuel Recommendations..... 52
Fuel Additives 57
Lubricating Grease..... 53
Foreword..... 4
California Proposition 65 Warning 4
Literature Information..... 4
Maintenance 4
Maintenance Intervals..... 4
Operation 4
Overhaul 4
Safety..... 4
Fuel and the Effect from Cold Weather..... 46
Fuel Conservation Practices..... 45
Fuel Related Components in Cold Weather 46
Fuel Heaters 47
Fuel Tanks..... 46
Fuel System - Prime 92
Fuel System Primary Filter (Water Separator) Element - Replace 92
Replace the Element..... 92
Fuel System Primary Filter/Water Separator - Drain 93
Fuel System Secondary Filter - Replace 94
Fuel Tank Water and Sediment - Drain..... 95
Drain the Water and the Sediment..... 95
Fuel Storage Tanks 95
Fuel Tank 95
Fumes Disposal Filter Element - Replace 96

G

General Hazard Information 7
Containing Fluid Spillage 9
Dispose of Waste Properly.....11
Fluid Penetration..... 9
Inhalation 10
Lines, Tubes, and Hoses 9
Pressurized Air and Water 8
Softwrap..... 10
Static Electricity Hazard when Fueling with Ultra-low Sulfur Diesel Fuel..... 9
General Information..... 17
Grounding Stud - Inspect/Clean/Tighten 97

H

Hoses and Clamps - Inspect/Replace..... 97
Inspect the Hoses and the Clamps..... 97
Replace the Hoses and the Clamps 98

I

Important Safety Information 2
Injector (Diesel Exhaust Fluid) - Replace 100

L

Lifting and Storage..... 22

M

Maintenance Interval Schedule 61
Daily 61
Every 10 000 Service Hours 62
Every 12 000 Service Hours or 6 Years 62
Every 2000 Service Hours 61
Every 2000 Service Hours or 1 Year..... 61
Every 250 Service Hours 61
Every 2500 Service Hours 61
Every 3000 Service Hours or 3 Years 61
Every 4000 Service Hours 61
Every 492 100 L (130 000 US gal) of Fuel ... 62
Every 500 Service Hours 61
Every 5000 Service Hours 62
Every 6000 Service Hours or 6 Years 62
When Required 61
Maintenance Interval Schedule (Engines With Ratings Greater Than 439 hp) 62
Daily 62
Every 10 000 Service Hours 63
Every 12 000 Service Hours or 6 Years 63
Every 2000 Service Hours 63
Every 2000 Service Hours or 1 Year..... 63
Every 250 Service Hours 62
Every 2500 Service Hours 63
Every 3000 Service Hours or 3 Years 63
Every 4000 Service Hours 63
Every 492 100 L (130 000 US gal) of Fuel ... 63
Every 500 Service Hours 62
Every 5000 Service Hours 63
Every 6000 Service Hours or 6 Years 63
Initial 500 Service Hours 62
When Required 62
Maintenance Log 111
Maintenance Recommendations..... 58
Maintenance Records.....110
Maintenance Section 50
Manual Stop Procedure..... 49
Monitoring System..... 32
Instrument Panel 33
Mounting and Dismounting..... 14

O

Operation Section..... 22
Ordering Replacement Parts 109
Overhaul Considerations 100
Oil Consumption as an Overhaul Indicator 100
Overhaul Recommendation 101

P

Plate Locations and Film Locations..... 19
Power Take-Off Clutch - Check 103
Product Description 17
Aftermarket Products and Cat Engines..... 18
Electronic Engine Features..... 17
Engine Service Life 17
Engine Specifications 17
Product Identification Information..... 19
Product Information Section 17
Product Lifting..... 22
Clean Emission Module Lifting..... 23
Engine and Factory Mounted CEM..... 22
Engine and Installed Radiator Only 23
Radiator Only 23
Product Storage..... 24
Extended Storage (Engine with DEF Tank) 26
Removal from Extended Storage (Engine with DEF Tank) 26
Removal from Storage 25
Storage (Less Than One Year) 24

R

Radiator - Clean..... 103
Radiator Restrictions 46
Reference Information..... 21
Reference Information Section 107
Reference Material 112
Additional Reference Material.....113
Coolants.....112
Fuels 112
Greases 112
Lubricants 112
Miscellaneous.....113
S·O·S Services 112
Reference Materials 110
Refill Capacities..... 50
Coolant Refill Capacity..... 50
Lubricant Refill Capacity 50

S

Safety Messages 5
Sulfuric Acid Burn (2) 6
Universal Warning (1) 6
Safety Section 5
Selective Catalytic Reduction Warning System 27
Definitions 27
Inducement Strategy for DEF Level (European Union) 28
Inducement Strategy for DEF Level (Worldwide) 30
Inducement Strategy for DEF Quality, Tampering, SCR System Fault, and Impeded EGR (European Union) 29
Inducement Strategy for DEF Quality, Tampering, SCR System Fault, and Impeded EGR (Worldwide) 31
Self-Diagnostics 38
Severe Service Application 59
Improper Maintenance Procedures (Maintenance Procedures Which May Contribute to a Severe Service Application) 60
Severe Environmental Factors 59
Severe Operating Conditions 60
Starting Motor - Inspect 104
Starting the Engine 40
Problems with the Wiring Harness 41
Starting Problems 41
Starting the Engine 40
Starting with Jump Start Cables (Do Not Use This Procedure in Hazardous Locations that have Explosive Atmospheres) 41
Stopping the Engine 48
Delayed Engine Shutdown (If Enabled) 48
System Pressure Release 58
Coolant System 58
Engine Oil 58
Fuel System 58

T

Table of Contents 3

W

Walk-Around Inspection 104
Inspect the Engine for Leaks and for Loose Connections 104
Warranty Information 106
Warranty Section 106
Welding on Engines with Electronic Controls 58

Product and Dealer Information

Note: For
product identification plate locations, see the section “Product Identification Information” in the Operation and Maintenance Manual.

Delivery Date: _____

Product Information

Model: _____

Product Identification Number: _____

Engine Serial Number: _____

Transmission
Serial Number: _____

Generator Serial Number: _____

Attachment Serial Numbers: _____

Attachment Information: _____

Customer Equipment Number: _____

Dealer Equipment
Number: _____

Dealer Information

Name: _____ Branch: _____

Address: _____

_____

_____

	Dealer Contact	Phone Number	Hours
Sales:			
Parts:			
Service:			

©2014 Caterpillar
All Rights Reserved

CAT, CATERPILLAR, their respective logos, “Caterpillar Yellow”, and the POWER EDGE trade dress as well as corporate and product identity used herein, are trademarks of Caterpillar and may not be used without permission.